SM_AG(GA)_R290_3D INV_EU_NA_2207

# XTREME 3D INVERTER SERIES

SERVICE MANUAL

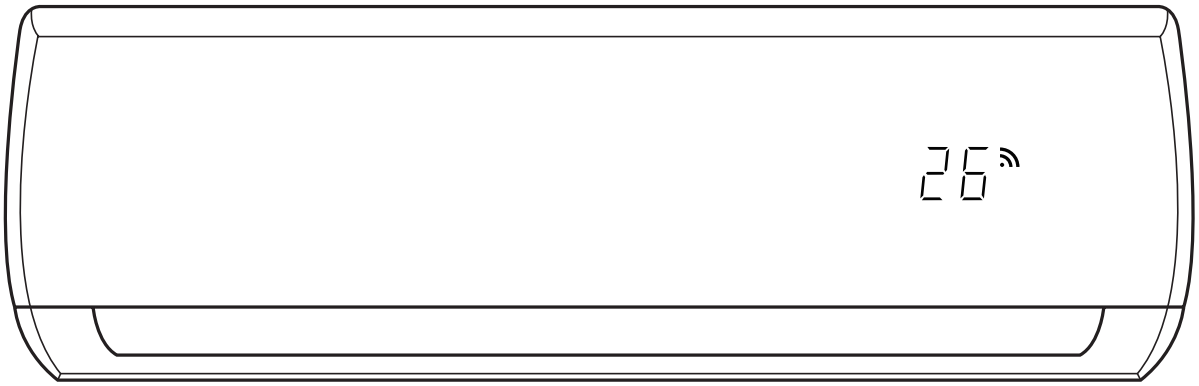

# Table of Contents


## §. Safety Precautions

1. Precautions
2. Information servicing(For flammable materials)

## §. Specifications

1. Model Reference
2. Pipe length and the Drop Height
3. Refrigerant Cycle Diagrams
4. Electrical Wiring Diagrams

## §. Product Features

1. Display Function
2. Safety Features
3. Basic Features

## §. Maintenance

1. First Time Installation Check
2. Refrigerant Recharge
3. Re-Installation

## §. Indoor Unit Disassembly

1. Dimension
2. Indoor Unit Disassembly

## §. Outdoor Unit Disassembly

1. Outdoor Unit Table
2. Dimension
3. Outdoor Unit Disassembly

# Table of Contents


## §. Troubleshooting

1. Safety Caution
2. General Troubleshooting
3. Complain Record Form
4. Information Inquiry
5. Error Diagnosis and Troubleshooting Without Error Code
6. Quick Maintenance by Error Code
7. Troubleshooting by Error Code
8. Check Procedures

## Appendix

i) Temperature Sensor Resistance Value Table for T1,T2,T3 and T4 (°C – K)

ii) Temperature Sensor Resistance Value Table for TP(for some units) (°C – K)

iii) Pressure On Service Port




Caution: Risk of fire
(Required for R32/R290
units only)

# Safety Precautions

## Contents

1. Precautions.....2
2. Information servicing(For flammable materials).....3

# 1. Precautions

To prevent personal injury, or property or unit damage, adhere to all precautionary measures and instructions outlined in this manual. Before servicing a unit, refer to this service manual and its relevant sections.

Failure to adhere to all precautionary measures listed in this section may result in personal injury, damage to the unit or to property, or in extreme cases, death.

**WARNING** indicates a potentially hazardous situation which if not avoided could result in serious personal injury, or death.

**CAUTION** indicates a potentially hazardous situation which if not avoided could result in minor or moderate personal injury, or unit damage.

## 1.1 In case of Accidents or Emergency

**WARNING**

- If a gas leak is suspected, immediately turn off the gas and ventilate the area if a gas leak is suspected before turning the unit on.
- If strange sounds or smoke is detected from the unit, turn the breaker off and disconnect the power supply cable.
- If the unit comes into contact with liquid, contact an authorized service center.
- If liquid from the batteries makes contact with skin or clothing, immediately rinse or wash the area well with clean water.
- Do not insert hands or other objects into the air inlet or outlet while the unit is plugged in.
- Do not operate the unit with wet hands.
- Do not use a remote controller that has previously been exposed to battery damage or battery leakage.

**CAUTION**

- Clean and ventilate the unit at regular intervals when operating it near a stove or near similar devices.
- Do not use the unit during severe weather conditions. If possible, remove the product from the window before such occurrences.

## 1.2 Pre-Installation and Installation

**WARNING**

- Use this unit only on a dedicated circuit.
- Damage to the installation area could cause the unit to fall, potentially resulting in personal injury, property damage, or product failure.
- Only qualified personnel should disassemble, install, remove, or repair the unit.
- Only a qualified electrician should perform electrical work. For more information, contact your dealer, seller, or an authorized service center.

**CAUTION**

- While unpacking be careful of sharp edges around the unit as well as the edges of the fins on the condenser and evaporator.

## 1.3 Operation and Maintenance

**WARNING**

- Do not use defective or under-rated circuit breakers.
- Ensure the unit is properly grounded and that a dedicated circuit and breaker are installed.
- Do not modify or extend the power cable. Ensure the power cable is secure and not damaged during operation.
- Do not unplug the power supply plug during operation.
- Do not store or use flammable materials near the unit.
- Do not open the inlet grill of the unit during operation.
- Do not touch the electrostatic filter if the unit is equipped with one.
- Do not block the inlet or outlet of air flow to the unit.
- Do not use harsh detergents, solvents, or similar items to clean the unit. Use a soft cloth for cleaning.
- Do not touch the metal parts of the unit when removing the air filter as they are very sharp.
- Do not step on or place anything on the unit or outdoor units.
- Do not drink water drained from the unit
- Avoid direct skin contact with water drained from the unit.
- Use a firm stool or step ladder according to manufacturer procedures when cleaning or maintaining the unit.

**CAUTION**

- Do not install or operate the unit for an extended period of time in areas of high humidity or in an environment directly exposing it to sea wind or salt spray.
- Do not install the unit on a defective or damaged installation stand, or in an unsecure location.
- Ensure the unit is installed at a level position
- Do not install the unit where noise or air discharge created by the outdoor unit will negatively impact the environment or nearby residences.
- Do not expose skin directly to the air discharged by the unit for prolonged periods of time.
- Ensure the unit operates in areas water or other liquids.
- Ensure the drain hose is installed correctly to ensure proper water drainage.
- When lifting or transporting the unit, it is recommended that two or more people are used for this task.
- When the unit is not to be used for an extended time, disconnect the power supply or turn off the breaker.

# 2. Information servicing(For flammable materials)

## 2.1 Checks to the area

- Prior to beginning work on systems containing flammable refrigerants, safety checks are necessary to ensure that the risk of ignition is minimized.
- For repair to the refrigerating system, the following precautions shall be complied with prior to conducting work on the system.

## 2.2 Work procedure

- Work shall be undertaken under a controlled procedure so as to minimise the risk of a flammable gas or vapour being present while the work is being performed.

## 2.3 Work procedure

- All maintenance staff and others working in the local area shall be instructed on the nature of work being carried out.
- Work in confined spaces shall be avoided.
- The area around the work space shall be sectioned off. Ensure that the conditions within the area have been made safe by control of flammable material.

## 2.4 Checking for presence of refrigerant

- The area shall be checked with an appropriate refrigerant detector prior to and during work, to ensure the technician is aware of potentially flammable atmospheres.
- Ensure that the leak detection equipment being used is suitable for use with flammable refrigerants, i.e. no sparking, adequately sealed or intrinsically safe.

## 2.5 Presence of fire extinguisher

- If any hot work is to be conducted on the refrigeration equipment or any associated parts, appropriate fire extinguishing equipment shall be available to hand.
- Have a dry powder or CO2 fire extinguisher adjacent to the charging area.

## 2.6 No ignition sources

- No person carrying out work in relation to a refrigeration system which involves exposing any pipe work that contains or has contained flammable refrigerant shall use any sources of ignition in such a manner that it may lead to the risk of fire or explosion.
- All possible ignition sources, including cigarette smoking, should be kept sufficiently far away from the site of installation, repairing, removing and disposal, during which flammable refrigerant can possibly be released to the surrounding space.
- Prior to work taking place, the area around the equipment is to be surveyed to make sure that there are no flammable hazards or ignition risks.
- NO SMOKING signs shall be displayed.

## 2.7 Ventilated area

- Ensure that the area is in the open or that it is adequately ventilated before breaking into the system or conducting any hot work. A degree of ventilation shall continue during the period that the work is carried out. The ventilation should safely disperse any released refrigerant and preferably expel it externally into the atmosphere.

## 2.8 Checks to the refrigeration equipment

- Where electrical components are being changed, they shall be fit for the purpose and to the correct specification. At all times the manufacturer's maintenance and service guidelines shall be followed. If in doubt consult the manufacturer's technical department for assistance. The following checks shall be applied to installations using flammable refrigerants:
  - the charge size is in accordance with the room size within which the refrigerant containing parts are installed;
  - the ventilation machinery and outlets are operating adequately and are not obstructed;
  - if an indirect refrigerating circuit is being used, the secondary circuit shall be checked for the presence of refrigerant; marking to the equipment continues to be visible and legible.
  - markings and signs that are illegible shall be corrected;
  - refrigeration pipe or components are installed in a position where they are unlikely to be exposed to any substance which may corrode refrigerant containing components, unless the components are constructed of materials which are inherently resistant to being corroded or are suitably protected against being so corroded.

## 2.9 Checks to electrical devices

- Repair and maintenance to electrical components shall include initial safety checks and component inspection procedures. If a fault exists that could compromise safety, then no electrical supply shall be connected to the circuit until it is satisfactorily dealt with. If the fault cannot be corrected immediately but it is necessary to continue operation, an adequate temporary solution shall be used. This shall be reported to the owner of the equipment so all parties are advised. Initial safety checks shall include:

- that capacitors are discharged: this shall be done in a safe manner to avoid possibility of sparking;
- that there no live electrical components and wiring are exposed while charging, recovering or purging the system;
- that there is continuity of earth bonding.

## 2.10 Repairs to sealed components

- During repairs to sealed components, all electrical supplies shall be disconnected from the equipment being worked upon prior to any removal of sealed covers, etc. If it is absolutely necessary to have an electrical supply to equipment during servicing, then a permanently operating form of leak detection shall be located at the most critical point to warn of a potentially hazardous situation.
- Particular attention shall be paid to the following to ensure that by working on electrical components, the casing is not altered in such a way that the level of protection is affected. This shall include damage to cables, excessive number of connections, terminals not made to original specification, damage to seals, incorrect fitting of glands, etc.
  - Ensure that apparatus is mounted securely.
  - Ensure that seals or sealing materials have not degraded such that they no longer serve the purpose of preventing the ingress of flammable atmospheres. Replacement parts shall be in accordance with the manufacturer's specifications.

NOTE: The use of silicon sealant may inhibit the effectiveness of some types of leak detection equipment. Intrinsically safe components do not have to be isolated prior to working on them.

## 2.11 Repair to intrinsically safe components

- Do not apply any permanent inductive or capacitance loads to the circuit without ensuring that this will not exceed the permissible voltage and current permitted for the equipment in use. Intrinsically safe components are the only types that can be worked on while live in the presence of a flammable atmosphere. The test apparatus shall be at the correct rating.
- Replace components only with parts specified by the manufacturer. Other parts may result in the ignition of refrigerant in the atmosphere from a leak.

## 2.12 Cabling

- Check that cabling will not be subject to wear, corrosion, excessive pressure, vibration, sharp edges or any other adverse environmental effects. The check shall also take into account the effects of aging or continual vibration from sources such as compressors or fans.

## 2.13 Detection of flammable refrigerants

- Under no circumstances shall potential sources of ignition be used in the searching for or detection of refrigerant leaks. A halide torch (or any other detector using a naked flame) shall not be used.

## 2.14 Leak detection methods

- The following leak detection methods are deemed acceptable for systems containing flammable refrigerants. Electronic leak detectors shall be used to detect flammable refrigerants, but the sensitivity may not be adequate, or may need re-calibration. (Detection equipment shall be calibrated in a refrigerant-free area.) Ensure that the detector is not a potential source of ignition and is suitable for the refrigerant used. Leak detection equipment shall be set at a percentage of the LFL of the refrigerant and shall be calibrated to the refrigerant employed and the appropriate percentage of gas (25 % maximum) is confirmed. Leak detection fluids are suitable for use with most refrigerants but the use of detergents containing chlorine shall be avoided as the chlorine may react with the refrigerant and corrode the copper pipe-work.
  - If a leak is suspected, all naked flames shall be removed or extinguished.
  - If a leakage of refrigerant is found which requires brazing, all of the refrigerant shall be recovered from the system, or isolated (by means of shut off valves) in a part of the systemremote from the leak. Oxygen free nitrogen (OFN) shall then be purged through the system both before and during the brazing process.

## 2.15 Removal and evacuation

- When breaking into the refrigerant circuit to make repairs or for any other purpose, conventional procedures shall be used. However, it is important that best practice is followed since flammability is a consideration.
- The following procedure shall be adhered to:
  - remove refrigerant;
  - purge the circuit with inert gas;
  - evacuate;
  - purge again with inert gas;
  - open the circuit by cutting or brazing.

- The refrigerant charge shall be recovered into the correct recovery cylinders. The system shall be flushed with OFN to render the unit safe. This process may need to be repeated several times. Compressed air or oxygen shall not be used for this task. Flushing shall be achieved by breaking the vacuum in the system with OFN and continuing to fill until the working pressure is achieved, then venting to atmosphere, and finally pulling down to a vacuum. This process shall be repeated until no refrigerant is within the system. When the final OFN charge is used, the system shall be vented down to atmospheric pressure to enable work to take place. This operation is absolutely vital if brazing operations on the pipe-work are to take place.
- Ensure that the outlet for the vacuum pump is not close to any ignition sources and there is ventilation available.

## 2.16 Charging procedures

- In addition to conventional charging procedures, the following requirements shall be followed:
  - Ensure that contamination of different refrigerants does not occur when using charging equipment. Hoses or lines shall be as short as possible to minimize the amount of refrigerant contained in them.
  - Cylinders shall be kept upright.
  - Ensure that the refrigeration system is earthed prior to charging the system with refrigerant.
  - Label the system when charging is complete (if not already).
  - Extreme care shall be taken not to overfill the refrigeration system.
  - Prior to recharging the system it shall be pressure tested with OFN. The system shall be leak tested on completion of charging but prior to commissioning. A follow up leak test shall be carried out prior to leaving the site.

## 2.17 Decommissioning

Before carrying out this procedure, it is essential that the technician is completely familiar with the equipment and all its detail. It is recommended good practice that all refrigerants are recovered safely. Prior to the task being carried out, an oil and refrigerant sample shall be taken.

In case analysis is required prior to re-use of reclaimed refrigerant. It is essential that electrical power is available before the task is commenced.

- Become familiar with the equipment and its operation.
- Isolate system electrically.
- Before attempting the procedure ensure that:
  - mechanical handling equipment is available, if required, for handling refrigerant cylinders;
  - all personal protective equipment is available and being used correctly;
  - the recovery process is supervised at all times by a competent person;
  - recovery equipment and cylinders conform to the appropriate standards.
- Pump down refrigerant system, if possible.
- If a vacuum is not possible, make a manifold so that refrigerant can be removed from various parts of the system.
- Make sure that cylinder is situated on the scales before recovery takes place.
- Start the recovery machine and operate in accordance with manufacturer's instructions.
- Do not overfill cylinders. (No more than 80 % volume liquid charge).
- Do not exceed the maximum working pressure of the cylinder, even temporarily.
- When the cylinders have been filled correctly and the process completed, make sure that the cylinders and the equipment are removed from site promptly and all isolation valves on the equipment are closed off.
- Recovered refrigerant shall not be charged into another refrigeration system unless it has been cleaned and checked.

## 2.18 Labelling

- Equipment shall be labelled stating that it has been de-commissioned and emptied of
- refrigerant. The label shall be dated and signed. Ensure that there are labels on the equipment stating the equipment contains flammable refrigerant.

## 2.19 Recovery

- When removing refrigerant from a system, either for servicing or decommissioning, it is recommended good practice that all refrigerants are removed safely.
- When transferring refrigerant into cylinders, ensure that only appropriate refrigerant recovery cylinders are employed. Ensure that the correct numbers of cylinders for holding the total system charge are available. All cylinders to be used are designated for the recovered refrigerant and labelled for that refrigerant (i.e. special cylinders for the recovery of refrigerant). Cylinders shall be complete with pressure relief valve and associated shut-off valves in good working order.

- Empty recovery cylinders are evacuated and, if possible, cooled before recovery occurs.
- The recovery equipment shall be in good working order with a set of instructions concerning the equipment that is at hand and shall be suitable for the recovery of flammable refrigerants. In addition, a set of calibrated weighing scales shall be available and in good working order.
- Hoses shall be complete with leak-free disconnect couplings and in good condition. Before using the recovery machine, check that it is in satisfactory working order, has been properly maintained and that any associated electrical components are sealed to prevent ignition in the event of a refrigerant release. Consult manufacturer if in doubt.
- The recovered refrigerant shall be returned to the refrigerant supplier in the correct recovery cylinder, and the relevant Waste Transfer Note arranged. Do not mix refrigerants in recovery units and especially not in cylinders.
- If compressors or compressor oils are to be removed, ensure that they have been evacuated to an acceptable level to make certain that flammable refrigerant does not remain within the lubricant. The evacuation process shall be carried out prior to returning the compressor to the suppliers. Only electric heating to the compressor body shall be employed to accelerate this process. When oil is drained from a system, it shall be carried out safely.

# Specifications

## Contents


1. Model Reference ..... 2
2. Pipe Length and Drop Height ..... 3
3. Refrigerant Cycle Diagrams ..... 4
4. Electrical Wiring Diagrams ..... 5

# 1. Model Reference

Refer to the following table to determine the specific indoor and outdoor unit model.

| Indoor Unit Model | Outdoor Unit Model | Capacity (Btu/h) | Power Supply |
|---|---|---|---|
| MSAGBU-12HRFN7-QRD6GW | MOX331-12HFN7-QRD6GW | 12k | 220-240V~, 50Hz, 1Phase |

## 2. Pipe Length and Drop Height

The length and elevation of connection pipe are shown in the table below. if the pipe length exceeds max pipe length, additional refrigerant should be charged to ensure nominal cooling/heating capacity.

| Capacity(Btu/h) | Standard Length | Max Pipe Length | Max Elevation | Additional Refrigerant |
|---|---|---|---|---|
| 12k | 5m (16.4ft) | 25m (82.0ft) | 10m (32.8ft) | 10g/m (0.11oz/ft) |

If oil flows back into the outdoor unit's compressor, this might cause liquid compression or deterioration of oil return. Oil traps in the rising gas pipe can prevent this.

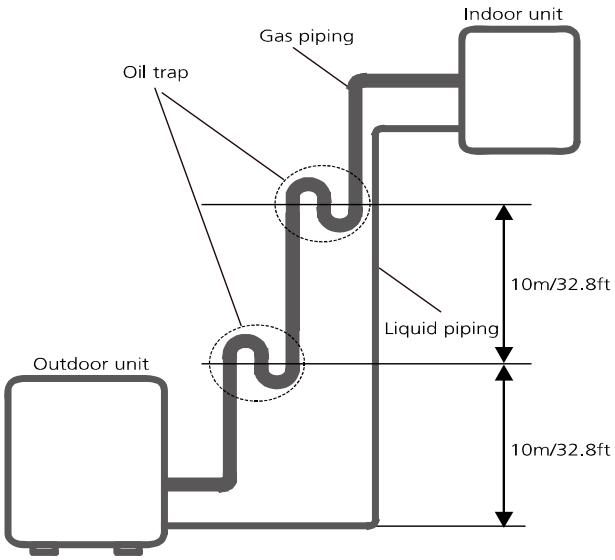


1. Indoor unit is installed higher than outdoor unit

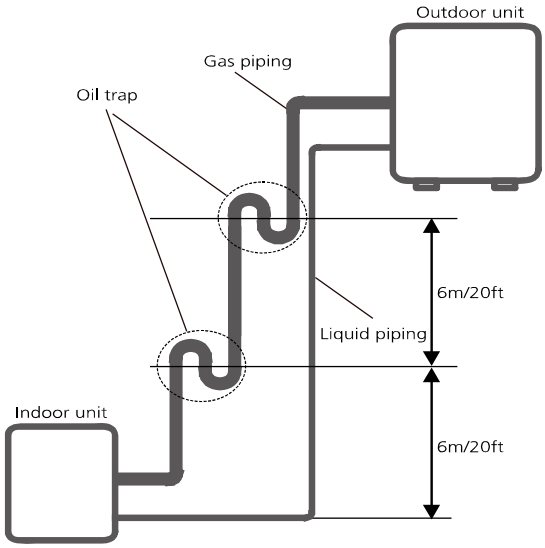


2. Outdoor unit is installed higher than indoor unit

If indoor unit is installed higher than outdoor unit, oil trap should be set every 10m(32.8ft) of vertical distance.

If the outdoor unit is installed higher than the indoor unit, proper oil should return to the compressor along with the suction of refrigerant to keep lubrication of compressor. If the suction flow velocity drops below 7.62m/s(1500fpm (feet per minute)), oil won't return to the compressor. An oil trap should be installed every 6m(20ft) of vertical distance.

## 3. Refrigerant Cycle Diagrams

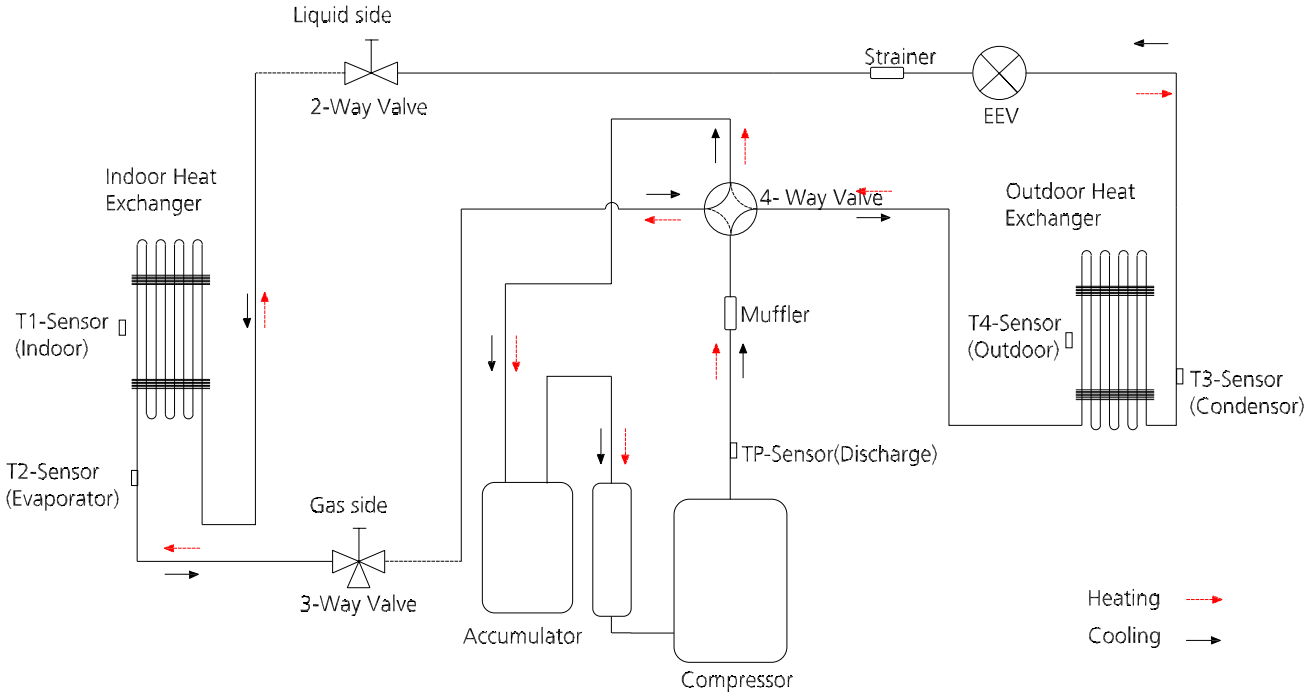

## 4. Electrical Wiring Diagrams

Indoor and outdoor unit wiring diagram

| Indoor Unit | | Outdoor Unit | |
|---|---|---|---|
| IDU Model | IDU Wiring Diagram | ODU Model | ODU Wiring Diagram |
| MSAGBU-12HRFN7-QRD6GW | 16022000034459 | MOX331-12HFN7-QRD6GW | 16022000019533 |

Outdoor unit printed circuit board diagram

| Outdoor Unit | |
|---|---|
| ODU Model | ODU Printed Circuit Board |
| MOX331-12HFN7-QRD6GW | 17122000053547 |

Indoor unit abbreviations

| Abbreviation | Paraphrase |
|---|---|
| Y/G | Yellow-Green Conductor |
| ION | Positive and Negative Ion Generator |
| CAP | Capacitor |
| PLASMA | Electronic Dust Collector |
| L | LIVE |
| N | NEUTRAL |

Outdoor unit abbreviations

| Abbreviation | Paraphrase |
|---|---|
| 4-WAY | Gas Valve Assembly/4-WAY VALVE |
| AC-FAN | Alternating Current FAN |
| DC-FAN | Direct Current FAN |
| COMP | Compressor |
| L-PRO | Low Pressure Switch |
| H-PRO | High Pressure Switch |

Indoor unit wiring diagram: 16022000034459

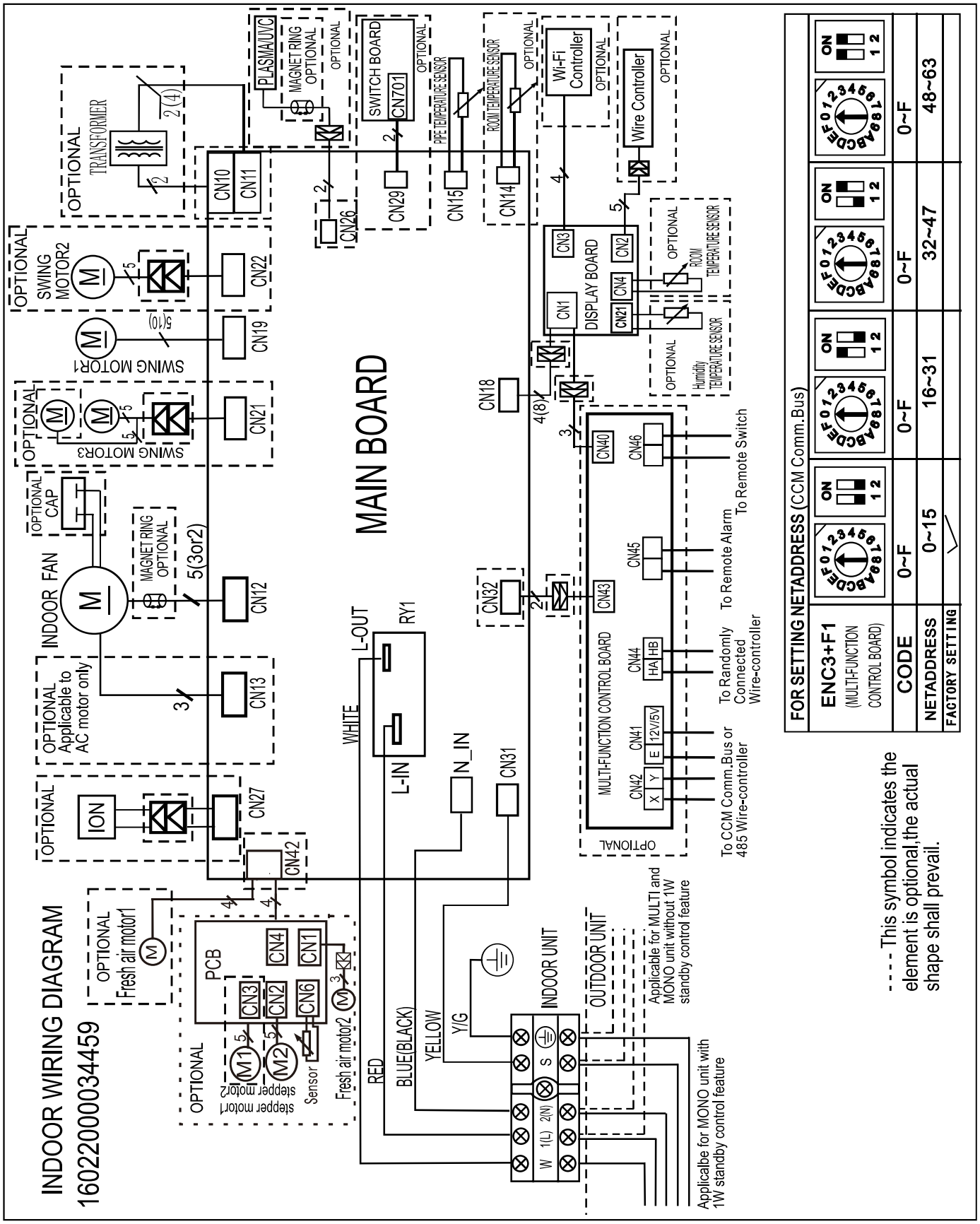

Outdoor unit printed circuit board diagram: 17122000044714, 17122000048121,17122000046453

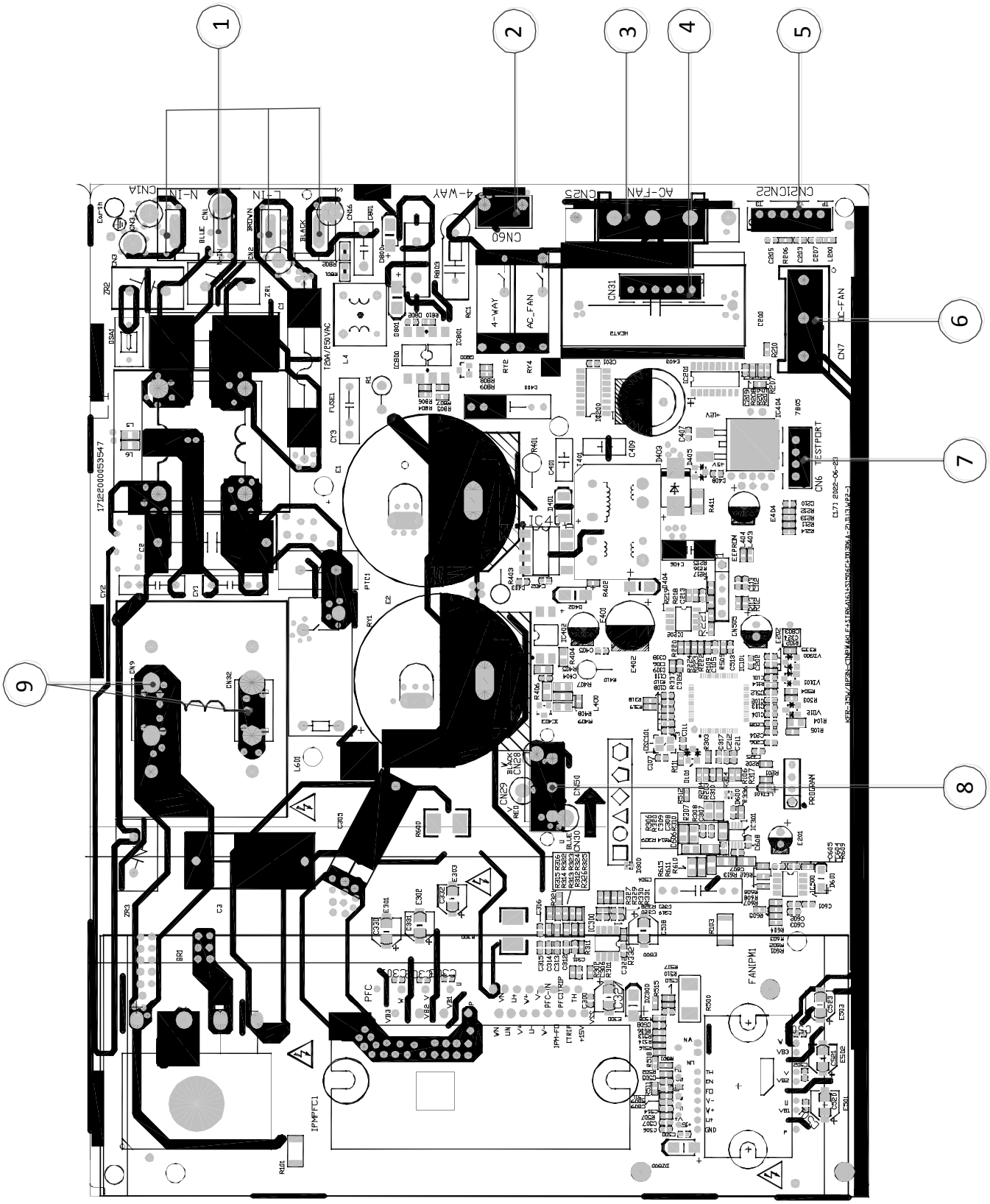

| No. | Name | CN# | | Meaning |
|---|---|---|---|---|
| 1 | CN1A | CN3 | | Earth: connect to Ground |
| | | CN1 | | N_in: connect to N-line (208-230V AC input) |
| | | CN2 | | L_in: connect to L-line (208-230V AC input) |
| | | CN16 | | S: connect to indoor unit communication |
| 2 | 4-WAY | CN60 | | connect to 4 way valve, 208-230V AC when is ON. |
| 3 | AC-FAN | CN25 | | connect to AC fan |
| 4 | PMV | CN31 | | connect to Electric Expansion Valve |
| 5 | TP T4 T3 | CN21/CN22 | | connect to pipe temp. sensor T3, ambient temp. sensor T4, exhaust temp. sensor TP |
| 6 | DC-FAN | CN7 | | connect to DC fan |
| 7 | TESTPORT | CN6 | | used for testing |
| 8 | W | CN28 | CN50 | connect to compressor |
| | V | CN29 | | 0V AC (standby) |
| | U | CN30 | | 10-200V AC (running) |
| 9 | REACTOR | CN9 | | connect to reactor |
| | | CN32 | | |

**Note: This section is for reference only. Please take practicality as standard.**

Outdoor unit wiring diagram: 16022000019533

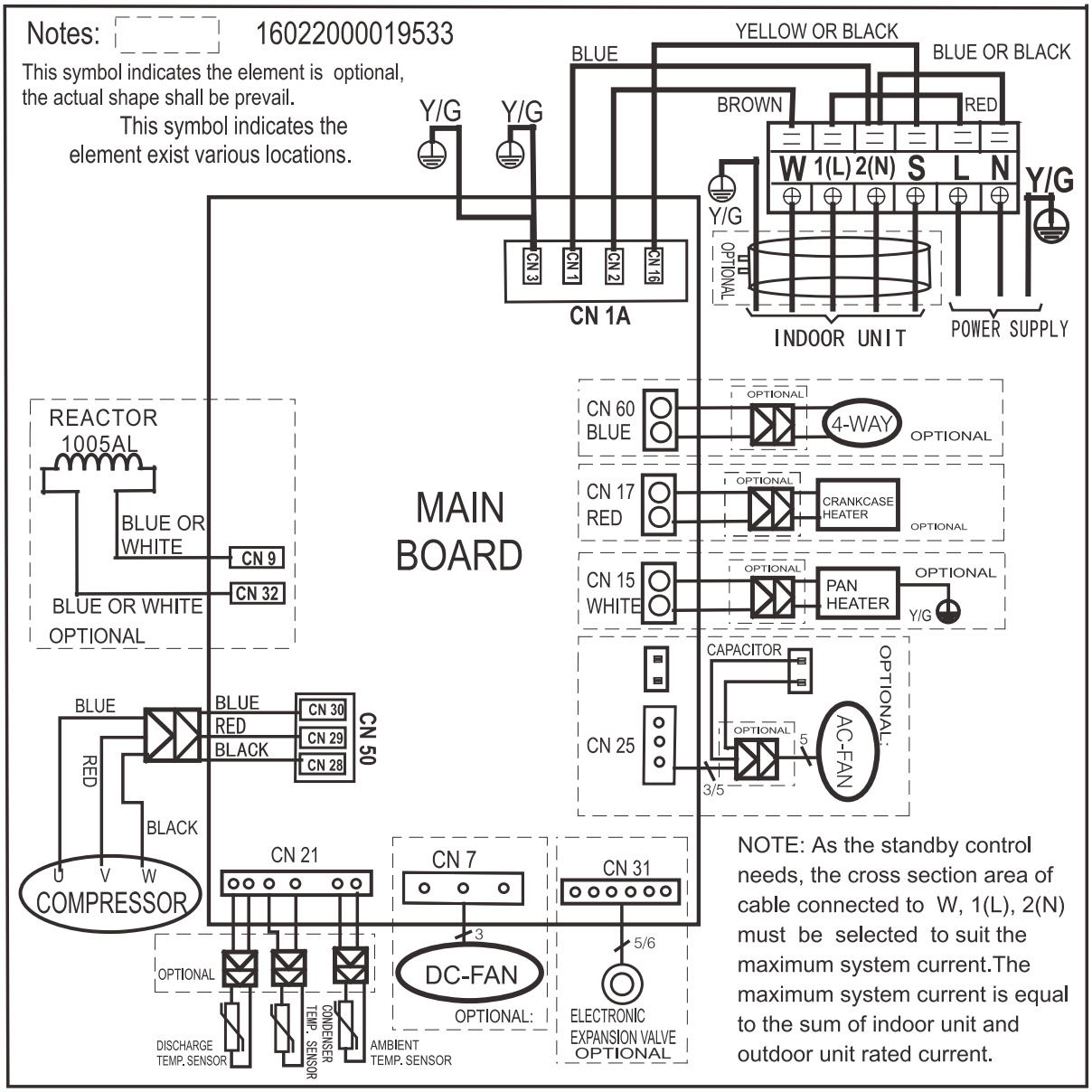

# Product Features

# Contents


**1. Display Function ..... 2**

**2 Safety Features ..... 3**

**3. Basic Functions ..... 4**

3.1 Table ..... 4

3.2 Abbreviation ..... 5

3.3 Fan Mode ..... 5

3.4 Cooling Mode ..... 5

3.5 Heating Mode(Heat Pump Units) ..... 6

3.6 Auto-mode ..... 8

3.7 Drying Mode ..... 8

3.8 Forced Operation Function ..... 8

3.9 Timer Function ..... 8

3.10 Sleep Function ..... 9

3.11 Auto-Restart Function ..... 9

3.12 Active Clean function ..... 9

3.13 Follow me(Optional) ..... 9

3.14 8°C Heating(Optional) ..... 9

3.15 Silence (Optional) ..... 9

3.16 ECO function(Optional) ..... 9

3.17 Electrical energy consumption control function(Optional) ..... 10

3.18 Breeze away function(Optional) ..... 10

3.19 Wireless control(optional) ..... 10

# 1. Display Function

Unit display functions



Display A




Display B

| Display | | Function |
|---|---|---|
| fresh | | Fresh(available on select units only) |
| defrost | | Defrost |
| run | | When the unit is on |
| timer | | When TIMER is on |
|  | | WiFi control (available on select units only) |
|  | Temperature value | Temperature |
| |  (3s) | Activation of Timer ON, Fresh, Swing, Turbo, or Silent |
| |  (3s) | Cancellation of Timer OFF, Fresh, Swing, Turbo, or Silent |
| |  | Defrost |
| |  | Active Clean(For Inverter split type) or self-cleaning(For Fixed-speed type) |
| |  | Heating in room temperature under 8°C |

**Note: Please select the display function according to your purchase product.**

## 2. Safety Features

**Compressor three-minute delay at restart**

Compressor functions are delayed for up to ten seconds upon the first startup of the unit, and are delayed for up to three minutes upon subsequent unit restarts.

**Automatic shutoff based on discharge temperature**

If the compressor discharge temperature exceeds a certain level for a period of time, the compressor ceases operation.

**Automatic shutoff based on fan speed**

If the indoor fan speed registers below 200RPM or over 2100RPM for an extended period of time, the unit ceases operation and the corresponding error code is displayed on the indoor unit.

**Inverter module protection**

The inverter module has an automatic shutoff mechanism based on the unit's current, voltage, and temperature. If automatic shutoff is initiated, the corresponding error code is displayed on the indoor unit and the unit ceases operation.

**Indoor fan delayed operation**

- When the unit starts, the louver is automatically activated and the indoor fan will operate after a period of setting time or the louver is in place.
- If the unit is in heating mode, the indoor fan is regulated by the anti-cold wind function.

**Compressor preheating**

Preheating is automatically activated when T4 sensor is lower than setting temperature.

**Sensor redundancy and automatic shutoff**

- If one temperature sensor malfunctions, the air conditioner continues operation and displays the corresponding error code, allowing for emergency use.
- When more than one temperature sensor is malfunctioning, the air conditioner ceases operation.

# 3. Basic Functions

## 3.1 Table

| Functions | | Heating Mode | |
|---|---|---|---|
| | | Defrosting Mode | |
| Cases | | Case 1 | Case 2 |
| Models | 12k | | ✓ |

**Note: The detailed description of case 1 or case 2 is shown in the following function section(3.5).**

## 3.2 Abbreviation

Unit element abbreviations

| Abbreviation | Element |
|---|---|
| T1 | Indoor room temperature |
| T2 | Coil temperature of evaporator |
| T3 | Coil temperature of condenser |
| T4 | Outdoor ambient temperature |
| Tsc | Adjusted setting temperature |
| TP | Compressor discharge temperature |
| CDIFTEMP | Cooling shutdown temperature |
| HDIFTEMP2 | Heating shutdown temperature |
| TCDI1 | Enter defrost temperature |
| TCDE1 | Exit defrost temperature1 |
| TCDE2 | Exit defrost temperature2 (maintain for a period of time ) |
| TIMING_ DEFROST_TIME | Enter defrost time |

In this manual, such as CDIFTEMP, HDIFTEMP2, TCDE1, TCDE2, TIMING_DEFROST_TIME...etc., they are well-setting parameter of EEPROM.

## 3.3 Fan Mode

When fan mode is activated:

- The outdoor fan and compressor cease operation.
- Temperature control is disabled and indoor room temperature is displayed.
- The indoor fan speed can be set to 1%~100%, or auto.
- The louver operations are identical to those in cooling mode.
- Auto fan: In fan-only mode, AC operates the same as auto fan in cooling mode with the temperature set at 24°C(75°F).(Tsc =24°C(75°F))

## 3.4 Cooling Mode

### 3.4.1 Compressor Control

Reach the configured temperature:

1) When the compressor runs continuously for within 120 minutes.

- If the following conditions are satisfied, the compressor ceases operation.
  - Calculated frequency(fb) is less than minimum limit frequency(FminC).
  - Compressor runs at FminC more than 10 minutes
  - T1 is lower than or equal to (Tsc-CDIFTEMP-0.5°C(32.9°F))

Note: CDIFTEMP is EEPROM setting parameter. It is 2°C(35.6°F) usually.

2) When the compressor runs continuously for more than 120 minutes.

- If the following conditions are satisfied, the compressor ceases operation.
  - Calculated frequency(fb) is less than minimum limit frequency(FminC).
  - Compressor runs at FminC more than 10 minutes.
  - T1 is lower than or equal to (Tsc-CDIFTEMP).

Note: CDIFTEMP is EEPROM setting parameter. It is 2°C(35.6°F) usually.

3) If one of the following conditions is satisfied, not judge protective time.

- Compressor running frequency(fr) is more than test frequency(TestFre).
- Compressor running frequency is equal to test frequency, T4 is more than 15°C(59°F) or T4 fault.
- Change setting temperature.
- Turbo or sleep function on/off
- Various frequency limit shutdown occurs.

### 3.4.2 Indoor Fan Control

1) In cooling mode, the indoor fan operates continuously. The fan speed can be set to 1%-100%, or auto.

2) Auto fan

For DC fan motor units:

- Descent curve
  - When T1-Tsc is lower than or equal to 3.5°C(6.3°F), fan speed reduces to 80%;
  - When T1-Tsc is lower than or equal to 1°C(1.8°F), fan speed reduces to 60%;
  - When T1-Tsc is lower than or equal to 0.5°C(0.9°F), fan speed reduces to 40%;
  - When T1-Tsc is lower than or equal to 0°C(0°F), fan speed reduces to 20%;
  - When T1-Tsc is lower than or equal to -0.5°C(-0.9°F), fan speed reduces to 1%.
- Rise curve
  - When T1-Tsc is higher than 0°C(0°F), fan speed increases to 20%;

- When T1-Tsc is higher than 0.5°C(0.9°F), fan speed increases to 40%;
- When T1-Tsc is higher than 1°C(1.8°F), fan speed increases to 60%;
- When T1-Tsc is higher than 1.5°C(2.7°F), fan speed increases to 80%;
- When T1-Tsc is higher than 4°C(7.2°F), fan speed increases to 100%.

For AC fan motor units:

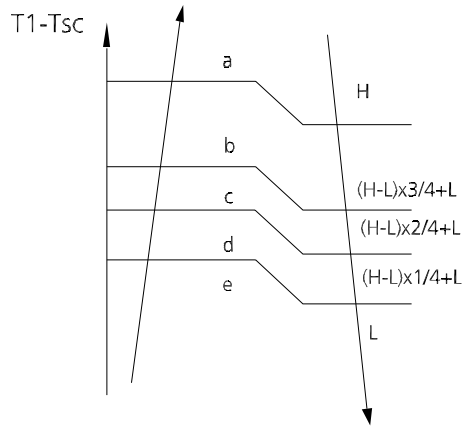


### 3.4.3 Outdoor Fan Control

- The outdoor unit will be run at different fan speed according to T4 and compressor running frequency..
- For different outdoor units, the fan speeds are different.

### 3.4.4 Condenser Temperature Protection

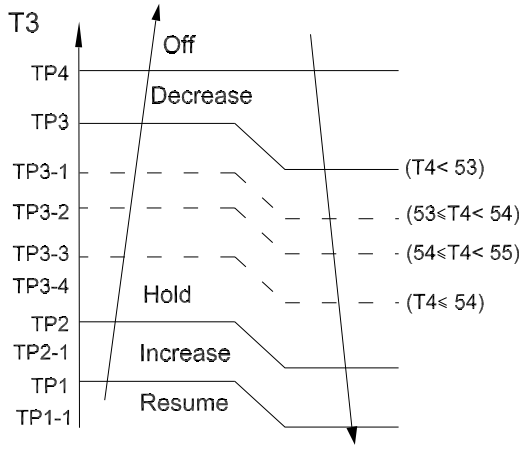


When the condenser temperature exceeds a configured value, the compressor ceases operation.

### 3.4.5 Evaporator Temperature Protection

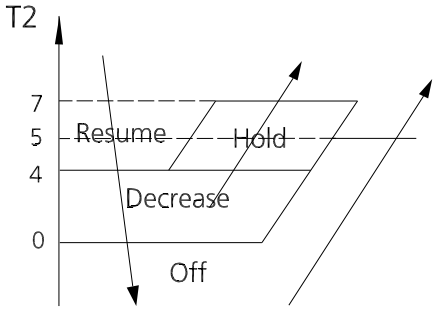


- Off: Compressor stops.
- Decrease: Decrease the running frequency to the lower level per 1 minute.
- Hold: Keep the current frequency.
- Resume: No limitation for frequency.

## 3.5 Heating Mode(Heat Pump Units)

### 3.5.1 Compressor Control

1) Reach the configured temperature

- If the following conditions are satisfied, the compressor ceases operation.
  - Calculated frequency(fb) is less than minimum limit frequency(FminH).
  - Compressor runs at FminH more than 10 minutes.
  - T1 is higher than or equal to Tsc+ HDIFTEMP2.

Note: HDIFTEMP2 is EEPROM setting parameter. It is 2°C(35.6°F) usually.

- If one of the following conditions is satisfied, not judge protective time.
  - Compressor running frequency(fr) is more than test frequency(TestFre).
  - When compressor running frequency is equal to test frequency, T4 is more than 15°C(59°F) or T4 fault.
  - Change setting temperature.
  - Turbo or sleep function on/off.

2) When the current is higher than the predefined safe value, surge protection is activated, causing the compressor to cease operations.

### 3.5.2 Indoor Fan Control:

1) In heating mode, the indoor fan operates continuously. The fan speed can be set to 1%-100%, or mute.And the anti-cold wind function has the priority.

- Anti-cold air function
  - The indoor fan is controlled by the indoor temperature T1 and indoor unit coil temperature T2.

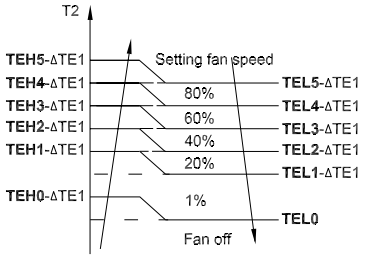


| | |
|---|---|
| T1 ≥ 19°C(66.2°F) | ΔTE1=0 |
| 15°C(59°F) ≤ T1 < 19°C(66.2°F) | ΔTE1=19°C−T1 (34.2°F-T1) |
| T1<15°C(59°F) | ΔTE1=4°C(7.2°F) |

2) Auto fan

For DC fan motor units:

- Rise curve
  - When T1-Tsc is higher than -1.5°C(-2.7°F), fan speed reduces to 80%;
  - When T1-Tsc is higher than 0°C(0°F), fan speed reduces to 60%;
  - When T1-Tsc is higher than 0.5°C(0.9°F), fan speed reduces to 40%;
  - When T1-Tsc is higher than 1°C(1.8°F), fan speed reduces to 20%.
- Descent curve
  - When T1-Tsc is lower than or equal to 0.5°C(0.9°F), fan speed increases to 40%;
  - When T1-Tsc is lower than or equal to 0°C(0°F), fan speed increases to 60%;
  - When T1-Tsc is lower than or equal to -1.5°C(-2.7°F), fan speed increases to 80%;
  - When T1-Tsc is lower than or equal to -3°C(5.4°F), fan speed increases to 100%.

For AC fan motor units:

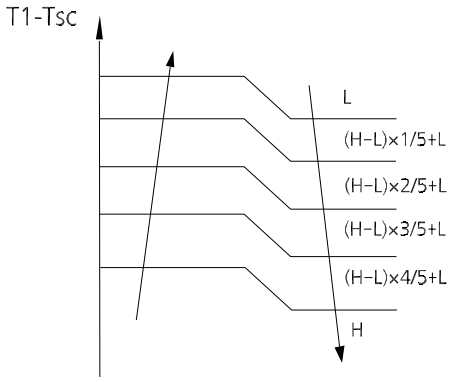


### 3.5.3 Outdoor Fan Control:

- The outdoor unit will be run at different fan speed according to T4 and compressor running frequency.
- For different outdoor units, the fan speeds are different.

### 3.5.4 Defrosting mode

- The unit enters defrosting mode according to changes in the temperature value of T3, T4 as well as the compressor running time.
- In defrosting mode, the compressor continues to run, the indoor and outdoor motor will cease operation, the defrost light of the indoor unit will turn on, and the "dF" symbol is displayed.
- If any one of the following conditions is satisfied, defrosting ends and the machine switches to normal heating mode:
  - T3 rises above TCDE1°C.
  - T3 maintained above TCDE2°C for 80 seconds.
  - Unit runs for 15 minutes consecutively in defrosting mode.
- If T4 is lower than or equal to -22°C(-7.6°F) and compressor running time is more than TIMING_DEFROST_TIME, if any one of the following conditions is satisfied, defrosting ends and the machine switches to normal heating mode:
  - Unit runs for 10 minutes consecutively in defrosting mode.
  - T3 rises above 10°C(50°F).

The following two conditions apply only to certain models, see tabel in section 3.1 for details.

Case 1:

- If T3 is lower than 3°C and compressor running time is more than 120 minutes, at this time, if T3 is lower than TCDI1+4°C(39.2°F) for 3 minutes, the unit enters defrosting mode.
- If any one of the following conditions is satisfied, defrosting ends and the machine switches to normal heating mode:
  - T3 rises above TCDE1+4°C.
  - T3 maintained above TCDE2+4°C for 80 seconds.
  - Unit runs for 15 minutes consecutively in defrosting mode.

Case 2:

- If any one of the following conditions is satisfied, the unit enters defrosting mode
  - If T3 or T4 is lower than -3°C(26.6°F) for 30 seconds,Ts-T1 is lower than 5°C and compressor running time is more than 90min.
  - If T3 or T4 is lower than -3°C(26.6°F) for 30 seconds and compressor running time is more than 120min.

- If any one of the following conditions is satisfied, defrosting ends and the machine switches to normal heating mode:
  - T3 rises above TCDE1+4°C.
  - T3 maintained above TCDE2+4°C for 80 seconds.
  - Unit runs for 15 minutes consecutively in defrosting mode.

### 3.5.5 Evaporator Temperature Protection

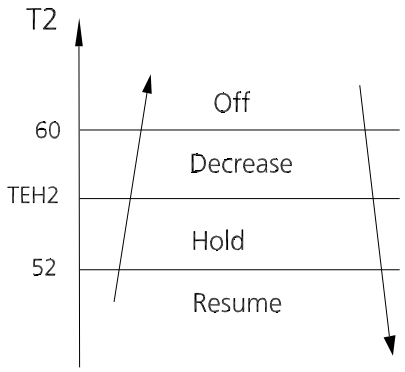


- Off: Compressor stops.
- Decrease: Decrease the running frequency to the lower level per 20 seconds.
- Hold: Keep the current frequency.
- Resume: No limitation for frequency.

## 3.6 Auto-mode

- This mode can be selected with the remote controller and the setting temperature can be changed between 16°C~30°C.
- In auto mode, the machine selects cooling, heating, auto-drying or fan-only mode on the basis of T1,Ts, T4 and relative humidity.

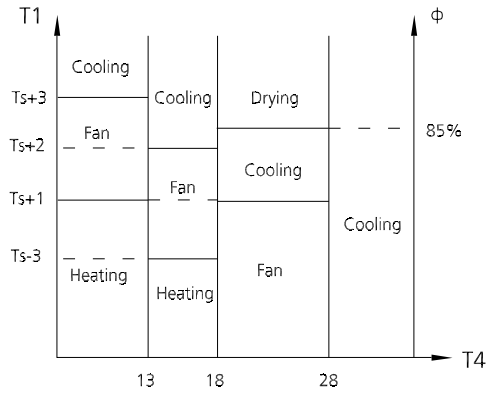


- If the setting temperature is modified, the machine selects a new running function.

## 3.7 Drying mode

- In drying mode, AC operates the same as auto fan in cooling mode.
- All protections are activated and operate the same as they do that in cooling mode.
- Low Room Temperature Protection

If the room temperature is lower than 10°C, the compressor ceases operations and does not resume until room temperature exceeds 12°C.

## 3.8 Forced operation function

- Forced cooling mode:

The compressor and outdoor fan continue to run(fixed at rated frequency), and the indoor fan runs at rated speed. After running for 30 minutes, the AC will switch to auto mode with a preset temperature of 24°C.

- Forced auto mode:

Forced auto mode operates the same as normal auto mode with a preset temperature of 24°C.

- The unit exits forced operation when it receives the following signals:
  - Switch on
  - Switch off
  - Timer on
  - Timer off
  - Sleep mode
  - Follow me
  - Changes in:
    - mode
    - fan speed
    - setting temperature
- Forced defrosting mode:
  - Press AUTO/COOL button continuously for 5s under forced cooling mode to enter this mode.
  - Indoor fan will stop, defrosting lamp will light on.
  - Quit this mode and turn off the unit when:
    - quit normal defrosting
    - turn off by RC
    - Press AUTO/COOL button continuously for 5s again

## 3.9 Timer function

- Timing range is 24 hours.
- Timer on. The machine will turn on automatically

when reaching the setting time.

- Timer off. The machine will turn off automatically when reaching the setting time.
- Timer on/off. The machine will turn on automatically when reaching the setting "on" time, and then turn off automatically when reaching the setting "off" time.
- Timer off/on. The machine will turn off automatically when reaching the setting "off" time, and then turn on automatically when reaching the setting "on" time.
- The timer function will not change the AC current operation mode. Suppose AC is off now, it will not start up firstly after setting the "timer off" function. And when reaching the setting time, the timer LED will be off and the AC running mode has not been changed.
- The setting time is relative time.
- The AC will quit the timer function when it has malfunction

## 3.10 Sleep function

- The sleep function is available in cooling, heating, or auto mode.
- The operational process for sleep mode is as follows:
  - When cooling, the temperature rises 1°C (to not higher than 30°C) every hour. After 2 hours, the temperature stops rising and the indoor fan is fixed at low speed.
  - When heating, the temperature decreases 1°C(to not lower than 16°C) every hour. After 2 hours, the temperature stops decreasing and the indoor fan is fixed at low speed. Anti-cold wind function takes priority.
- The operating time for sleep mode is 8 hours, after which, the unit exits this mode.
- The timer setting is available in this mode.

## 3.11 Auto-Restart function

- The indoor unit has an auto-restart module that allows the unit to restart automatically. The module automatically stores the current settings and, in the case of a sudden power failure, will restore those setting automatically within 3 minutes after power returns.
- If there is a power failure while the unit is running, the compressor starts 3 minutes after the unit restarts. If the unit was already off before the power failure, the unit stands by.

## 3.12 Active Clean function

- The Active Clean Technology washes away dust, mold, and grease that may cause odors when it adheres to the heat exchanger by automatically freezing and then rapidly thawing the frost. The internal wind wheel then keeps operating to blow-dry the evaporator, thus preventing the growth of mold and keeping the inside clean.
- When this function is turned on, the indoor unit display window appears "CL", after 20 to 130 minutes, the unit will turn off automatically and cancel Active Clean function.

## 3.13 Follow me(Optional)

- If you press "Follow Me" on the remote, the indoor unit will beep. This indicates the follow me function is active.
- Once active, the remote control will send a signal every 3 minutes, with no beeps. The unit automatically sets the temperature according to the measurements from the remote control.
- The unit will only change modes if the information from the remote control makes it necessary, not from the unit's temperature setting.
- If the unit does not receive a signal for 7 minutes or you press "Follow Me," the function turns off. The unit regulates temperature based on its own sensor and settings.

## 3.14 8°C Heating(Optional)

In heating mode, the temperature can be set to as low as 8°C, preventing the indoor area from freezing if unoccupied during severe cold weather.

## 3.15 Silence (Optional)

Press "Silence" on the remote control to enable the SILENCE function. While this function is active, the indoor unit will run at faint breeze(1% fan speed), which reduces noise to the lowest possible level.

## 3.16 ECO function (Optional)

- Used to enter the energy efficient mode.
  - Under cooling mode, press ECO button, the remote controller will adjust the temperature automatically to 24°C, fan speed of Auto to save energy (but only if the set temperature is less than 24°C). If the set temperature is more than 24°C and 30°C, press the ECO button, the fan speed will change to Auto, the set temperature will remain unchanged.
- When AC receives signals, such as switch off, Turbo operation , Silence operation , Self clean operation

, Forced cooling operation, mode setting, Sleeping mode, or adjusting the set temperature to less than 24°C,it will quit the ECO operation.

- Operation time in ECO mode is 8 hours. After 8 hours the AC quits this mode.
- When there's any one temperature sensor in malfunction, the AC will quit ECO mode .
- Indoor fan will run at auto fan when enter into the ECO mode .The setting temperature and setting fan speed can be changed through remote controller signal.

## 3.17 Electrical energy consumption control function (Optional)

Press the "Gear" button on remote controller to enter the energy efficient mode in a sequence of following:

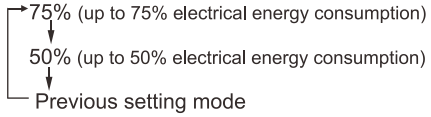


Turn off the unit or activate ECO, sleep, Super cool, 8°C Heating, Silence or self clean function will quit this function.

## 3.18 Breeze Away function (Optional)

- This feature avoids direct airflow blowing on the body and makes you feel indulging in silky coolness.
- NOTE: This feature is available under cooling mode, fan-only mode and drying mode.

## 3.19 Wireless Control (Optional)

- Wireless control allows you to control your air conditioner using your mobile phone and a Wireless connection.
- For the USB device access, replacement, maintenance operations must be carried out by professional staff.

# Maintenance

## Contents


**1. First Time Installation Check ..... 2**

**2 Refrigerant Recharge ..... 4**

**3 Re-Installation ..... 5**

3.1 Indoor Unit ..... 5

3.2 Outdoor Unit ..... 7

# 1. First Time Installation Check

Air and moisture trapped in the refrigerant system affects the performance of the air conditioner by:

- Increasing pressure in the system.
- Increasing the operating current.
- Decreasing the cooling or heating efficiency.
- Congesting the capillary tubing due to ice build-up in the refrigerant circuit.
- Corroding the refrigerant system.

To prevent air and moisture from affecting the air conditioner's performance, the indoor unit, as well as the pipes between the indoor and outdoor unit, must be be leak tested and evacuated.

**Leak test (soap water method)**

Use a soft brush to apply soapy water or a neutral liquid detergent onto the indoor unit connections and outdoor unit connections. If there is gas leakage, bubbles will form on the connection.

**Air purging with vacuum pump**

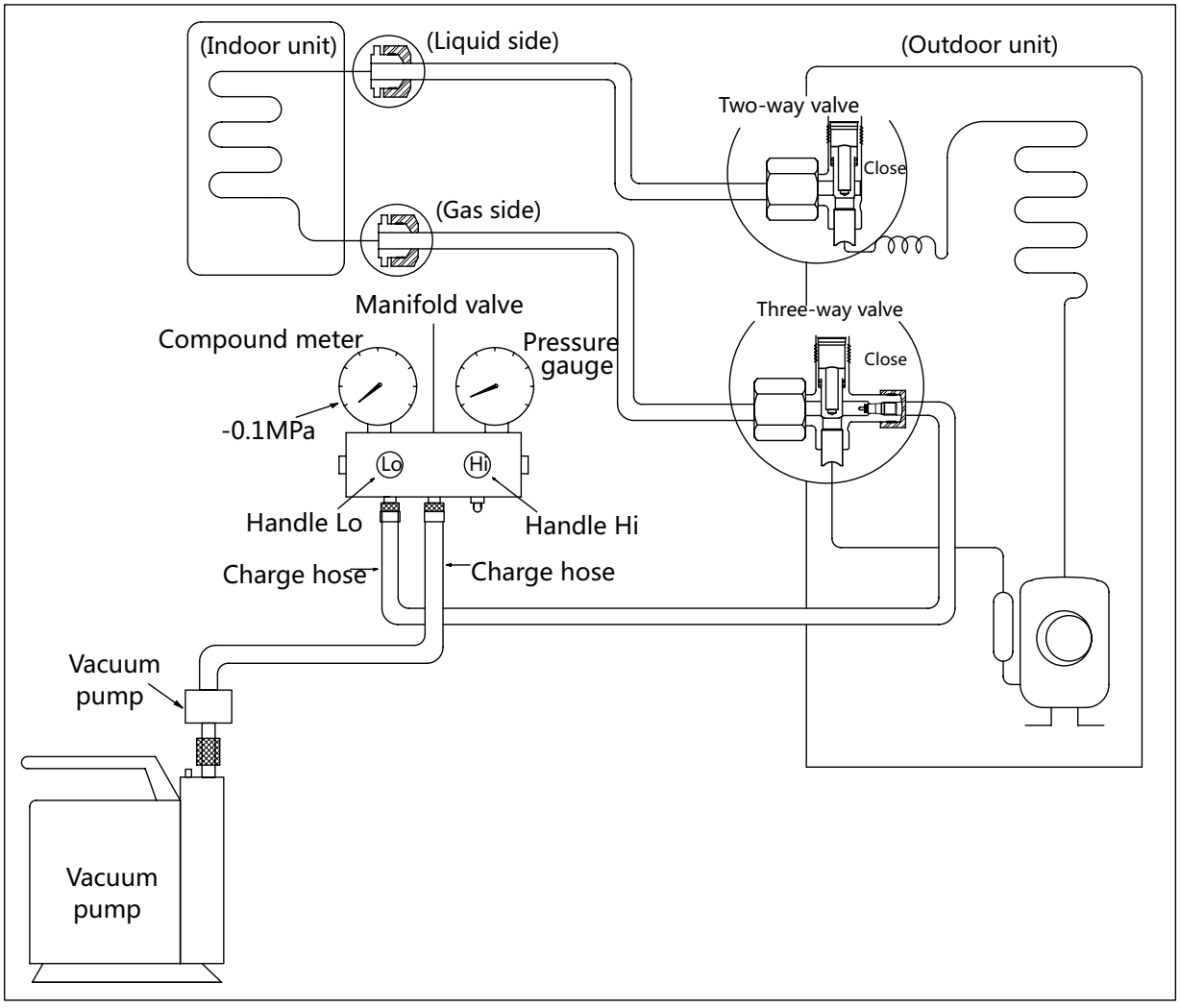

**Procedure:**

1. Tighten the flare nuts of the indoor and outdoor units, and confirm that both the 2- and 3-way valves are closed.
2. Connect the charge hose with the push pin of Handle Lo to the gas service port of the 3-way valve.
3. Connect another charge hose to the vacuum pump.
4. Fully open the Handle Lo manifold valve.
5. Using the vacuum pump, evacuate the system for 30 minutes.
   a. Check whether the compound meter indicates -0.1 MPa (14.5 Psi).
      - If the meter does not indicate -0.1 MPa (14.5 Psi) after 30 minutes, continue evacuating for an additional 20 minutes.
      - If the pressure does not achieve -0.1 MPa (14.5 Psi) after 50 minutes, check for leakage.
      - If the pressure successfully reaches -0.1 MPa (14.5 Psi), fully close the Handle Lo valve, then cease vacuum pump operations.
   b. Wait for 5 minutes then check whether the gauge needle moves after turning off the vacuum pump. If the gauge needle moves backward, check wether there is gas leakage.
6. Loosen the flare nut of the 3-way valve for 6 or 7 seconds and then tighten the flare nut again.
   a. Confirm the pressure display in the pressure indicator is slightly higher than the atmospheric pressure.
   b. Remove the charge hose from the 3-way valve.
7. Fully open the 2- and 3-way valves and tighten the cap of the 2- and 3-way valves.

## 2. Refrigerant Recharge

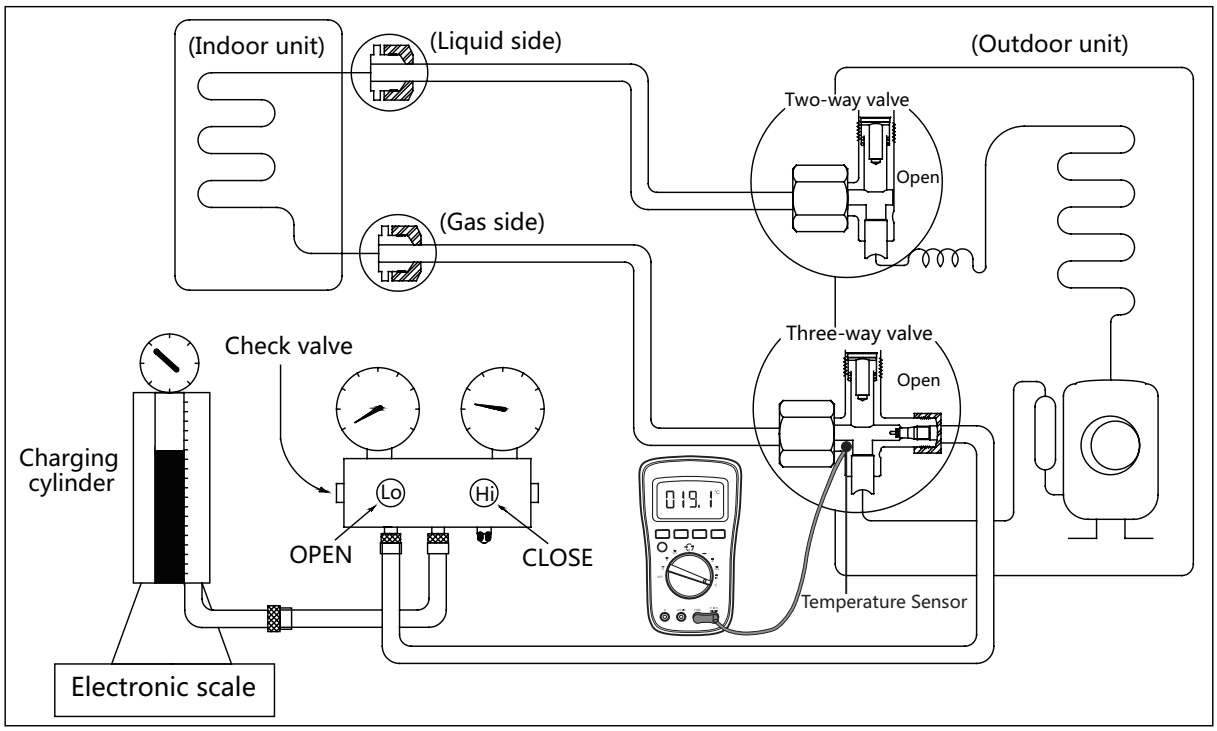


**Procedure:**

1. Close both 2- and 3-way valves.
2. Slightly connect the Handle Lo charge hose to the 3-way service port.
3. Connect the charge hose to the valve at the bottom of the cylinder.
4. If the refrigerant is R410A/R32, invert the cylinder to ensure a complete liquid charge.
5. Open the valve at the bottom of the cylinder for 5 seconds to purge the air in the charge hose, then fully tighten the charge hose with push pin Handle Lo to the service port of 3-way valve..
6. Place the charging cylinder onto an electronic scale and record the starting weight.
7. Fully open the Handle Lo manifold valve, 2- and 3-way valves.
8. Operate the air conditioner in cooling mode to charge the system with liquid refrigerant.
9. When the electronic scale displays the correct weight (refer to the gauge and the pressure of the low side to confirm, the value of pressure refers to chapter Appendix), turn off the air conditioner, then disconnect the charge hose from the 3-way service port immediately..
10. Mount the caps of service port and 2- and 3-way valves.
11. Use a torque wrench to tighten the caps to a torque of 18 N.m.
12. Check for gas leakage.

# 3. Re-Installation

## 3.1 Indoor Unit

**Collecting the refrigerant into the outdoor unit**

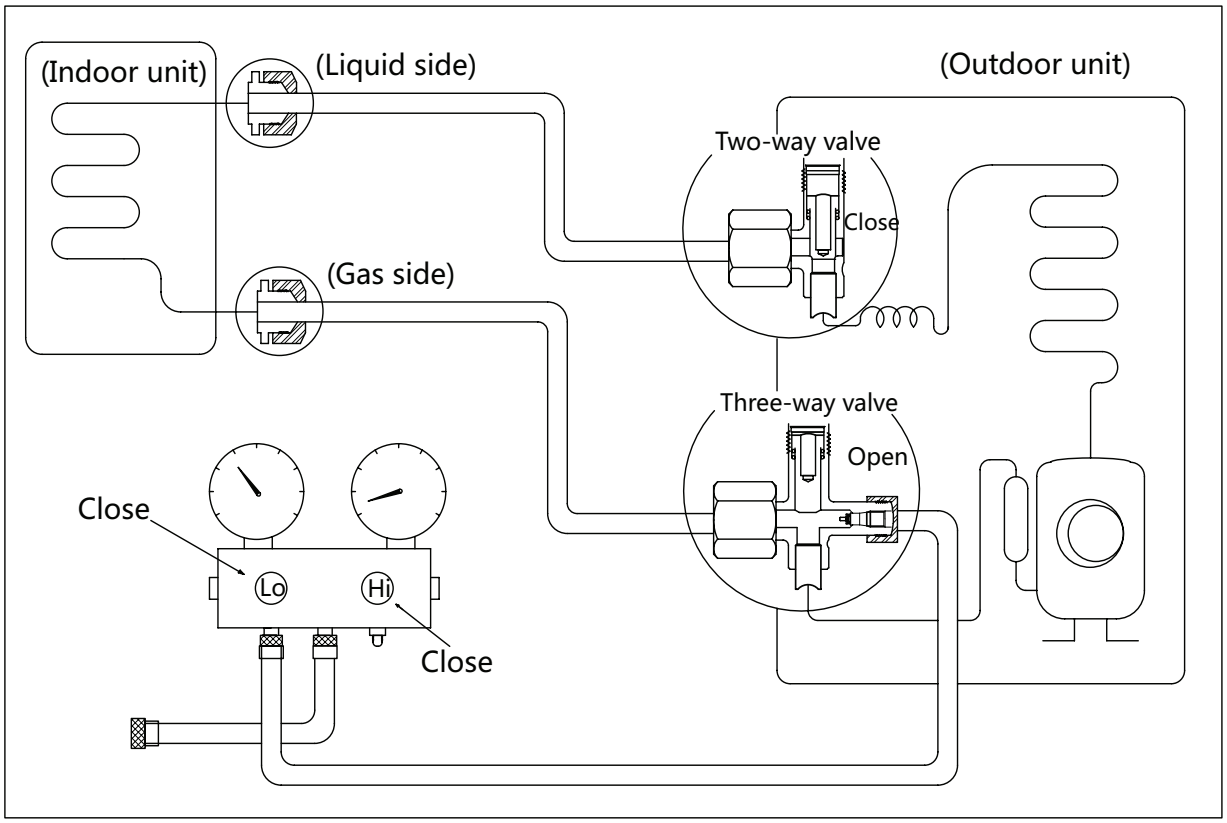


**Procedure:**

1. Confirm that the 2- and 3-way valves are opened.
2. Connect the charge hose with the push pin of Handle Lo to the 3-way valve's gas service port.
3. Open the Handle Lo manifold valve to purge air from the charge hose for 5 seconds and then close it quickly.
4. Close the 2-way valve.
5. Operate the air conditioner in cooling mode. Cease operations when the gauge reaches 0.1 MPa (14.5 Psi).
6. Close the 3-way valve so that the gauge rests between 0.3 MPa (43.5 Psi) and 0.5 MPa (72.5 Psi).
7. Disconnect the charge set and mount the caps of service port and 2- and 3-way valves.
8. Use a torque wrench to tighten the caps to a torque of 18 N.m.
9. Check for gas leakage.

**Air purging with vacuum pump**

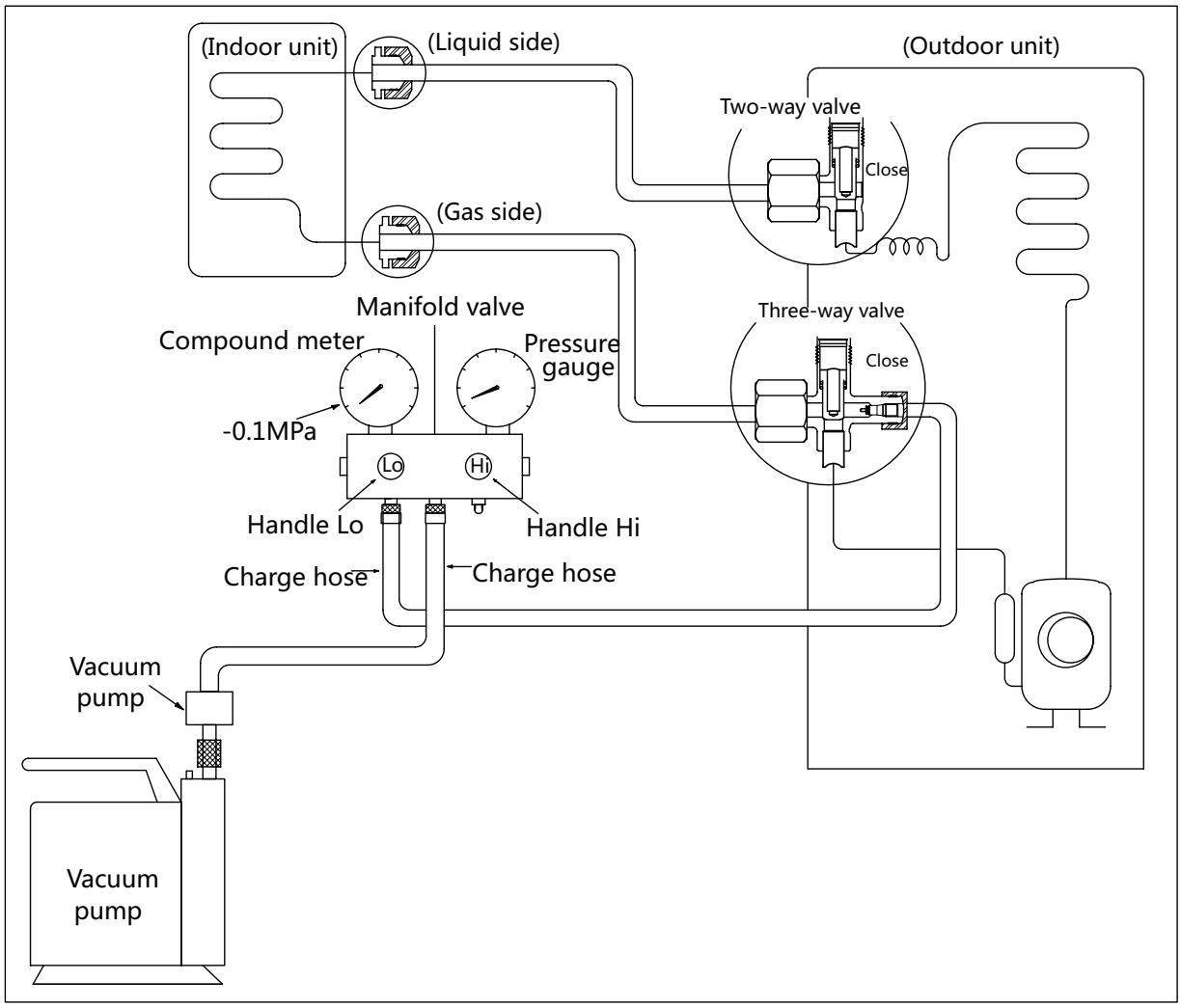


**Procedure:**

1. Tighten the flare nuts of the indoor and outdoor units, and confirm that both the 2- and 3-way valves are closed.
2. Connect the charge hose with the push pin of Handle Lo to the gas service port of the 3-way valve.
3. Connect another charge hose to the vacuum pump.
4. Fully open the Handle Lo manifold valve.
5. Using the vacuum pump, evacuate the system for 30 minutes.
   a. Check whether the compound meter indicates -0.1 MPa (14.5 Psi).
      - If the meter does not indicate -0.1 MPa (14.5 Psi) after 30 minutes, continue evacuating for an additional 20 minutes.
      - If the pressure does not achieve -0.1 MPa (14.5 Psi) after 50 minutes, check for leakage.
      - If the pressure successfully reaches -0.1 MPa (14.5 Psi), fully close the Handle Lo valve, then cease vacuum pump operations.

   b. Wait for 5 minutes then check whether the gauge needle moves after turning off the vacuum pump. If the gauge needle moves backward, check wether there is gas leakage.
6. Loosen the flare nut of the 3-way valve for 6 or 7 seconds and then tighten the flare nut again.
   a. Confirm the pressure display in the pressure indicator is slightly higher than the atmospheric pressure.
   b. Remove the charge hose from the 3-way valve.
7. Fully open the 2- and 3-way valves and tighten the cap of the 2- and 3-way valves.

## 3.2 Outdoor Unit

**Evacuation for the whole system**

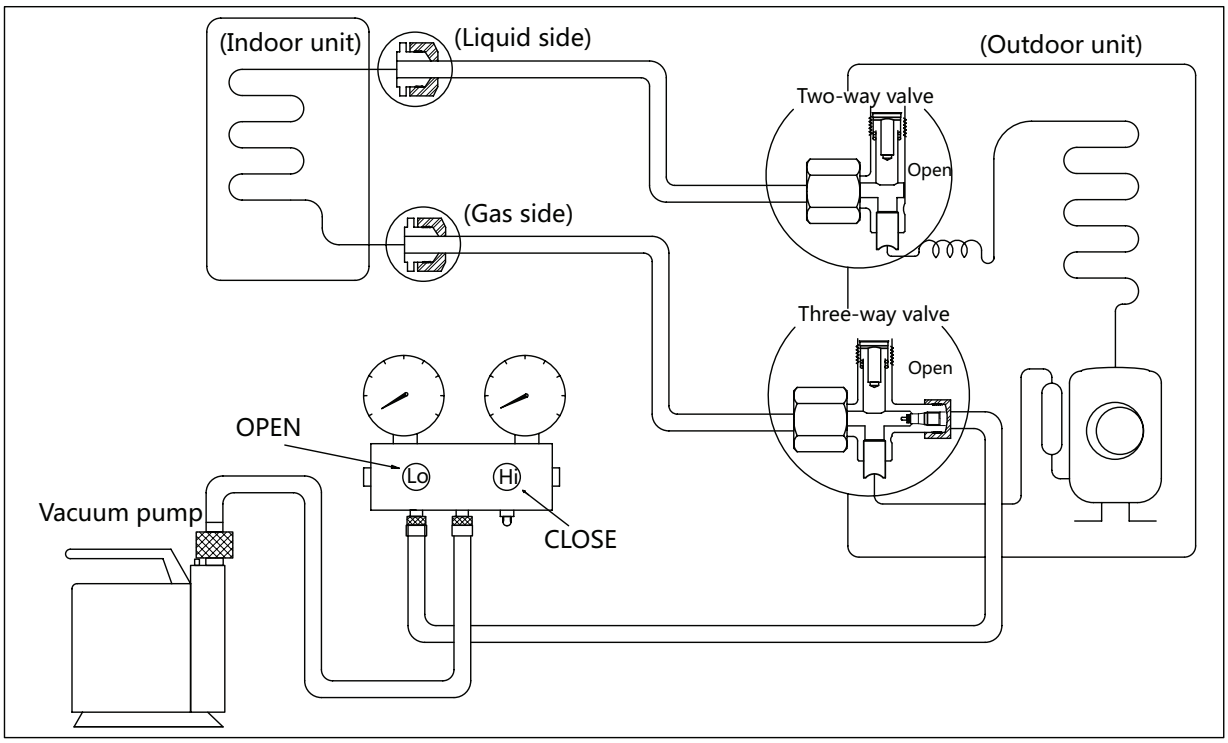


**Procedure:**

1. Confirm that the 2- and 3-way valves are opened.
2. Connect the vacuum pump to the 3-way valve's service port.
3. Evacuate the system for approximately one hour. Confirm that the compound meter indicates -0.1 MPa (14.5Psi).
4. Close the valve (Low side) on the charge set and turn off the vacuum pump.
5. Wait for 5 minutes then check whether the gauge needle moves after turning off the vacuum pump. If the gauge needle moves backward, check whether there is gas leakage.
6. Disconnect the charge hose from the vacuum pump.
7. Mount the caps of service port and 2- and 3-way valves.
8. Use a torque wrench to tighten the caps to a torque of 18 N.m.

## Refrigerant charging

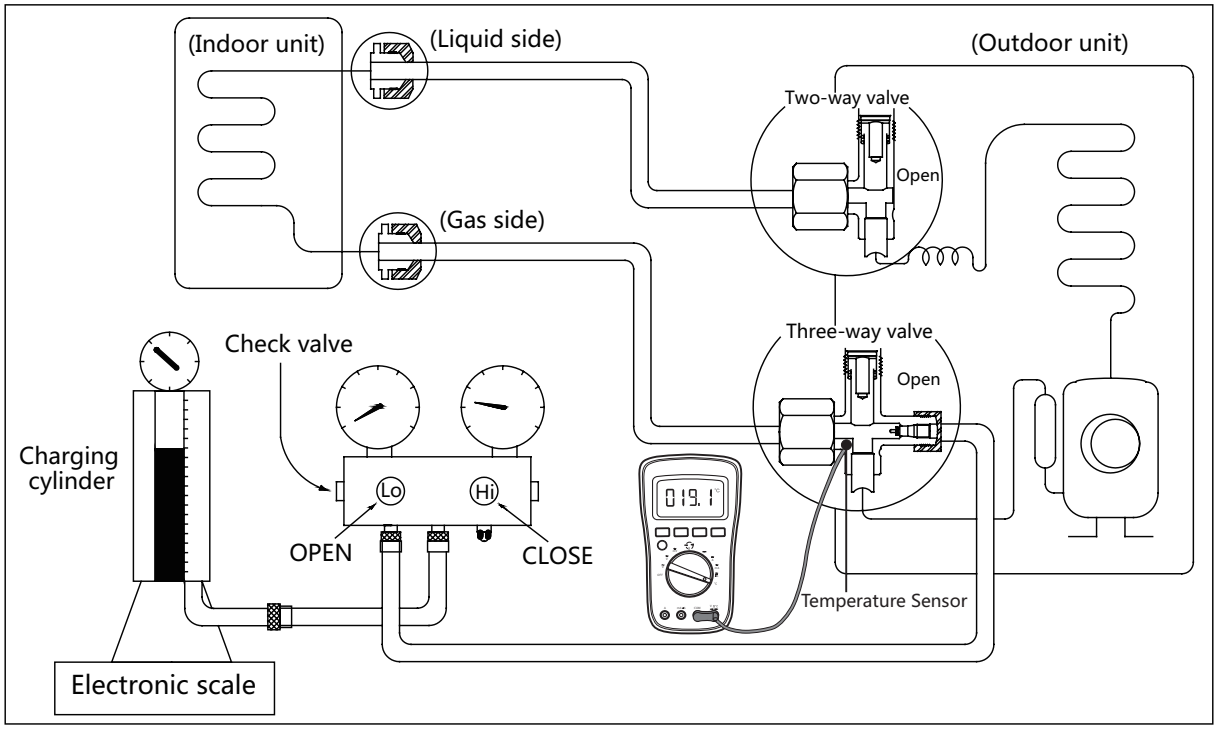


**Procedure:**

1. Close both 2- and 3-way valves.
2. Slightly connect the Handle Lo charge hose to the 3-way service port.
3. Connect the charge hose to the valve at the bottom of the cylinder.
4. If the refrigerant is R410A/R32, invert the cylinder to ensure a complete liquid charge.
5. Open the valve at the bottom of the cylinder for 5 seconds to purge the air in the charge hose, then fully tighten the charge hose with push pin Handle Lo to the service port of 3-way valve..
6. Place the charging cylinder onto an electronic scale and record the starting weight.
7. Fully open the Handle Lo manifold valve, 2- and 3-way valves.
8. Operate the air conditioner in cooling mode to charge the system with liquid refrigerant.
9. When the electronic scale displays the correct weight (refer to the gauge and the pressure of the low side to confirm, the value of pressure refers to chapter Appendix), turn off the air conditioner, then disconnect the charge hose from the 3-way service port immediately..
10. Mount the caps of service port and 2- and 3-way valves.
11. Use a torque wrench to tighten the caps to a torque of 18 N.m.
12. Check for gas leakage.

**Note: 1. Mechanical connectors used indoors shall comply with local regulations.**

**2. When mechanical connectors are reused indoors, sealing parts shall be renewed. When flared joints are reused indoors, the flare part shall be re-fabricated.**

# Indoor Unit Disassembly

## Contents


**1. Dimension ..... 2**

**2. Indoor Unit Disassembly ..... 4**

2.1 Front Panel ..... 4

2.2 Electrical parts ..... 10

2.3 Evaporator ..... 12

2.4 Fan motor and fan ..... 14

2.5 Step motor ..... 16

2.6 Drain Hose ..... 17

## 1. Dimension

AG1:

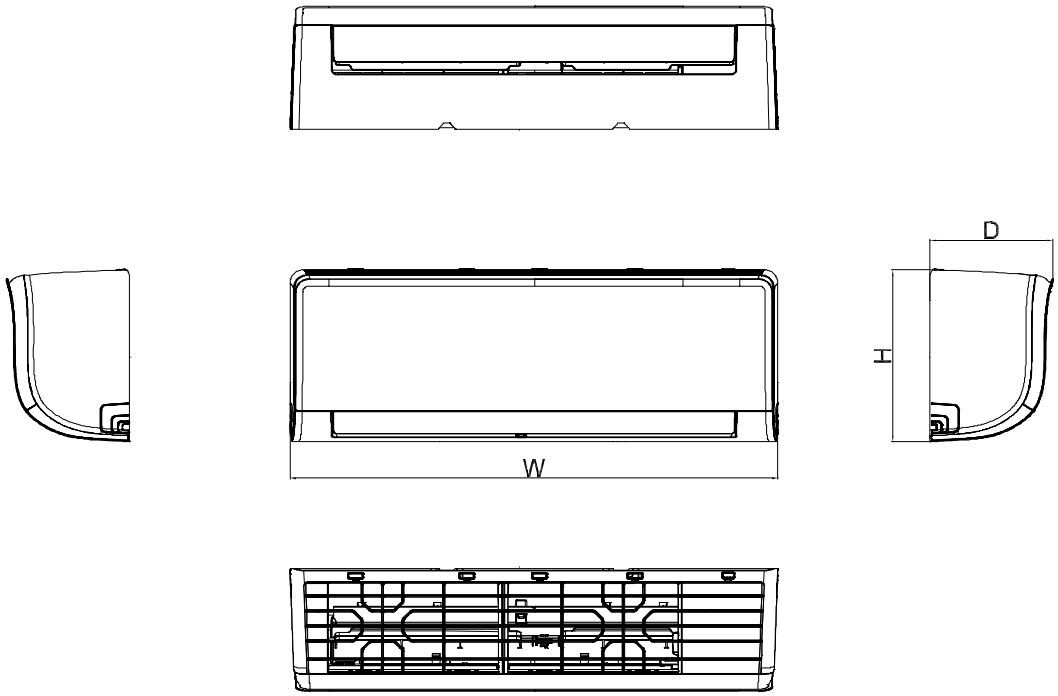


| Capacity | Body Code | W(mm) | D(mm) | H(mm) |
|---|---|---|---|---|
| 6K~11K | A | 726 | 210 | 291 |
| 8K~14K | B | 835 | 208 | 295 |
| 12K~21K | C | 969 | 241 | 320 |
| 18K~28K | D | 1083 | 244 | 336 |

AG11

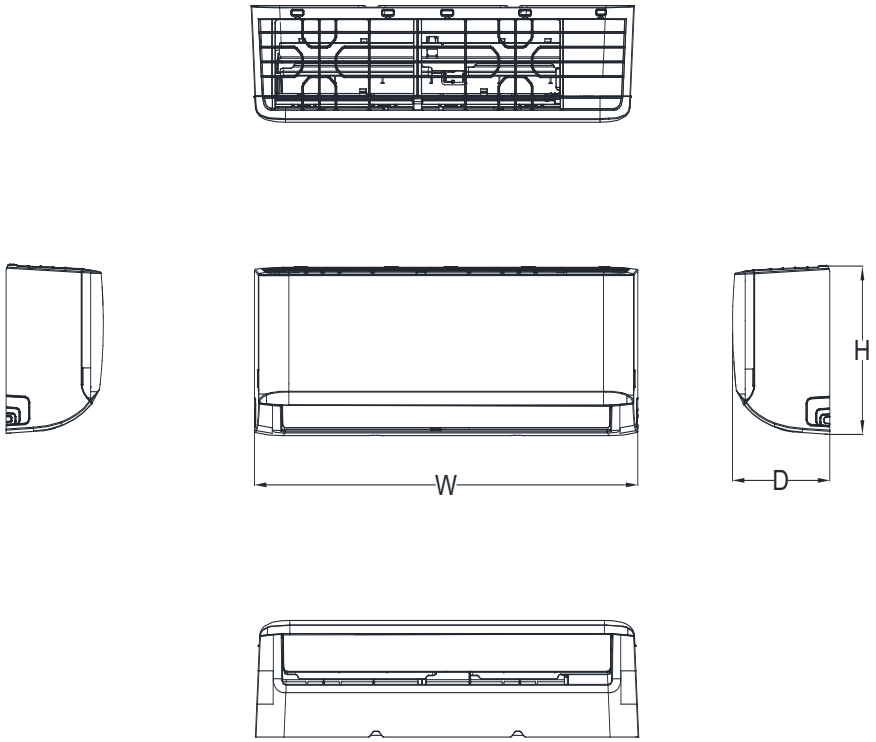


| Capacity | Body Code | W(mm/inch) | D(mm/inch) | H(mm/inch) |
|---|---|---|---|---|
| 6K~11K | A | 729/28.7 | 200/7.87 | 292/11.5 |
| 8K~14K | B | 802/31.57 | 200/7.87 | 295/11.61 |
| 12K~21K | C | 971/38.23 | 228/8.98 | 321/12.64 |
| 18K~28K | D | 1082/42.6 | 234/9.21 | 337/13.27 |

# 2. Indoor Unit Disassembly

## 2.1 Front Panel

| Procedure | Illustration |
|---|---|
| 1) Hold the front panel by the tabs on the both sides and lift it (see CJ_AG_001). | 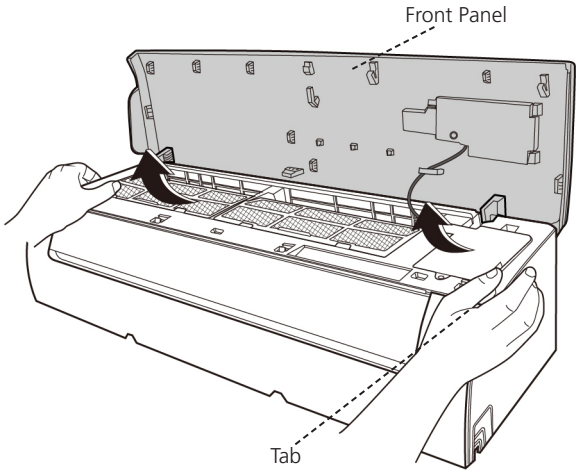 **CJ_AG_001** |
| 2) Push up the bottom of an air filter (step 1), and then pull it out downwards (step 2) (see CJ_AG_002). | 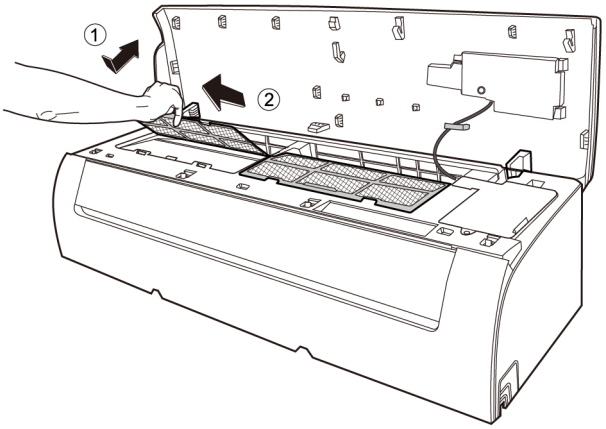 **CJ_AG_002** |

**Note: This section is for reference only. Actual unit appearance may vary.**

| Procedure | Illustration |
| --- | --- |
| 3) Open the horizontal louver and push the hook towards left to open it (see CJ_AG_003). | 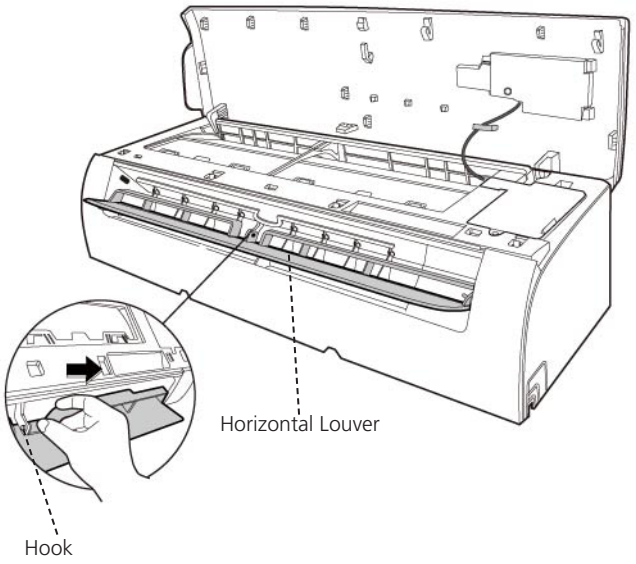 **CJ_AG_003** |
| 4) Bend the horizontal louver lightly by both hands to loosen the hooks, then remove the horizontal louver (see CJ_AG_003). | 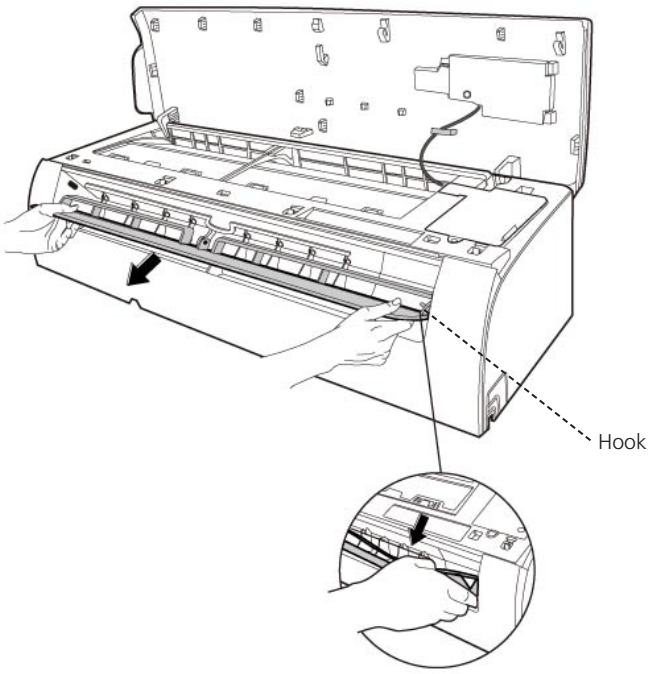 **CJ_AG_004** |

**Note: This section is for reference only. Actual unit appearance may vary.**

| Procedure | Illustration |
| --- | --- |
| 5) Pry the electrical cover by a screw driver, and rotate it towars left, then remove it. (see CJ_AG_005). | 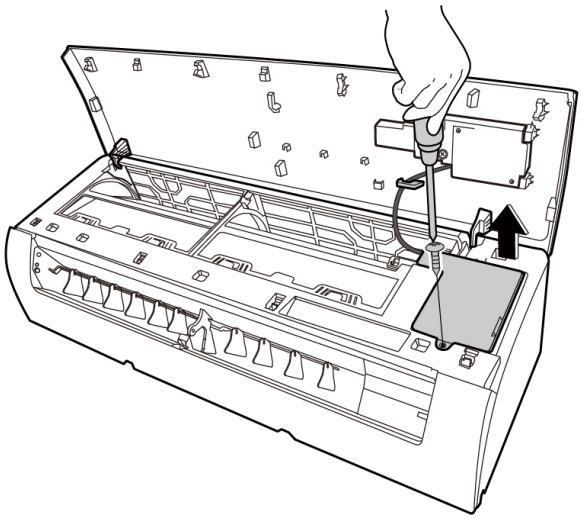 CJ_AG_005 |
| 6) Disconnect the connector for display board. (see CJ_AG_006) .<br>7) Slid the front panel side to side to release each axis (see CJ_AG_006) | 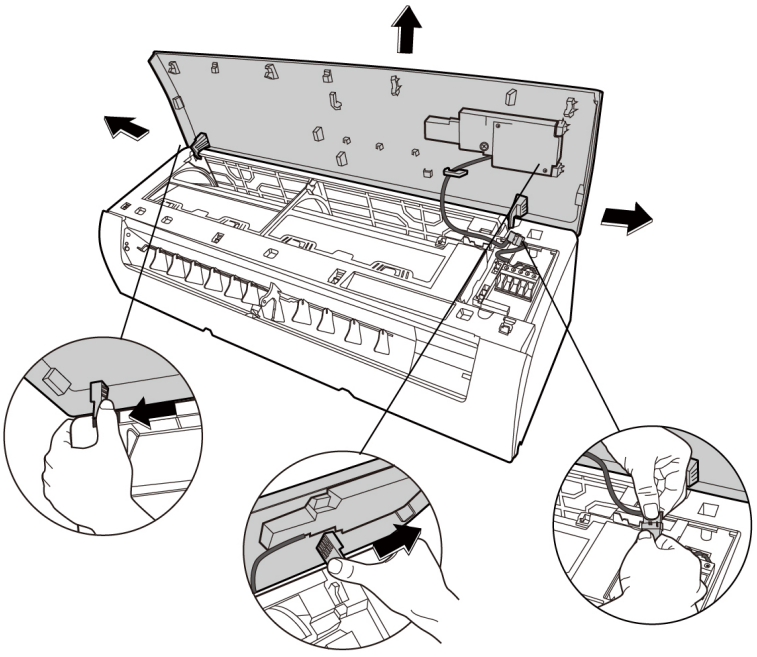 CJ_AG_006 |

**Note: This section is for reference only. Actual unit appearance may vary.**

| Procedure | Illustration |
| --- | --- |
| 8) Open the screw cap and then remove the 3 screws (see CJ_AG_008). | 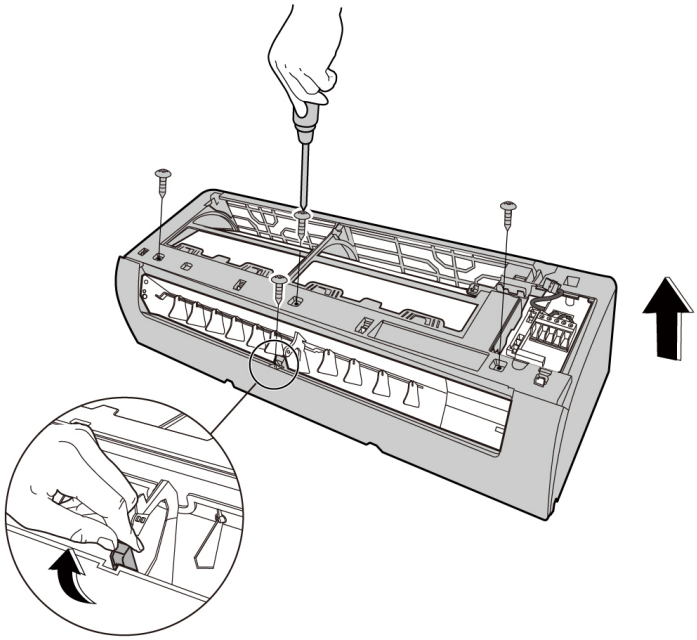 CJ_AG_007 |
| 9) Release the hooks with hands. (see CJ_AG_008) | 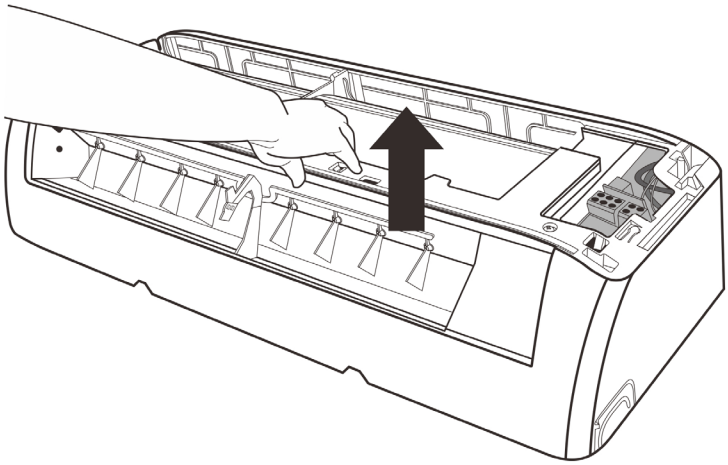 CJ_AG_008 |

**Note: This section is for reference only. Actual unit appearance may vary.**

| Procedure | Illustration |
| --- | --- |
| 10)Release the 5 hooks in the back (see CJ_AG_009). | 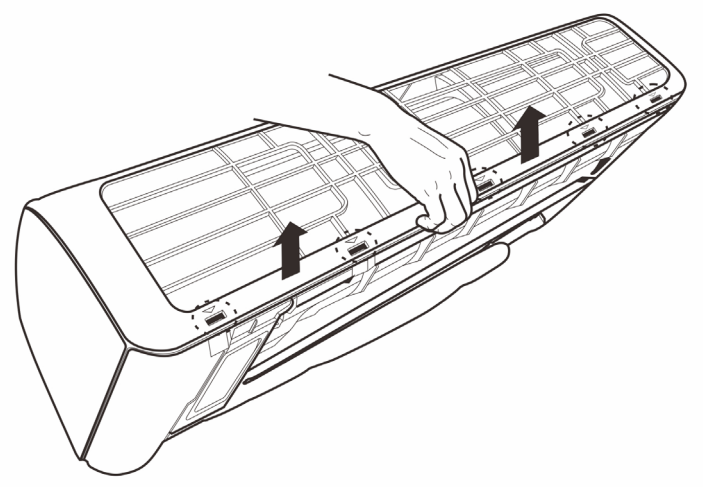 CJ_AG_009 |
| 11)Pull out the panel frame while pushing the hook through a clearance between the panel frame and the heat exchanger. (see CJ_AG_010) | 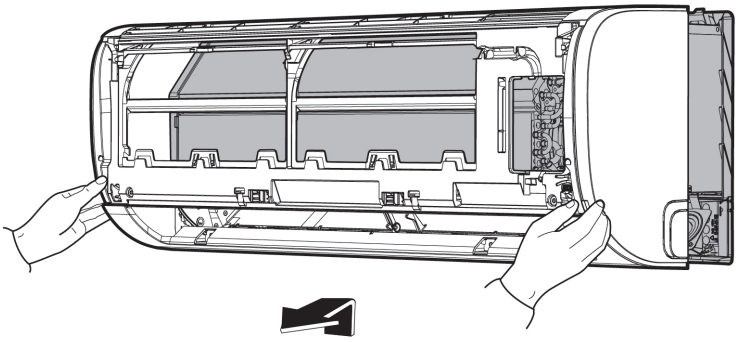 CJ_AG_010 |

**Note: This section is for reference only. Actual unit appearance may vary.**

| Procedure | Illustration |
| --- | --- |
| 12)Release the 5 hooks of the vertical blades, then pull the vertical blades rightward and remove it (see CJ_AG_011). | 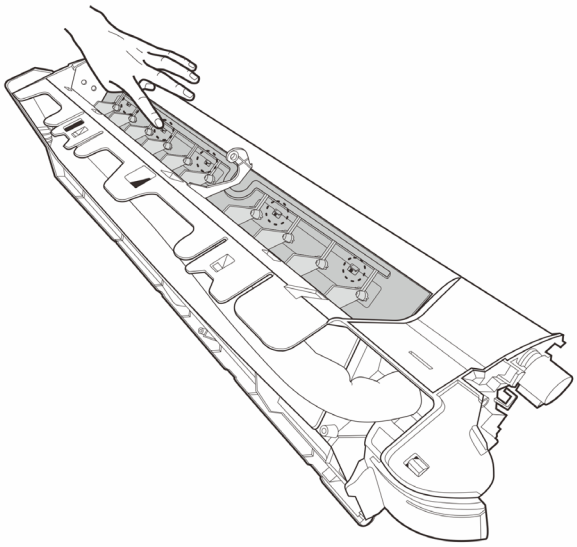 CJ_AG_011 |
| 13)Remove 1 screw of the display board. (see CJ_AG_012).<br>14)Rotate the display board in the direction shown in the right picture. (see CJ_AG_012). | 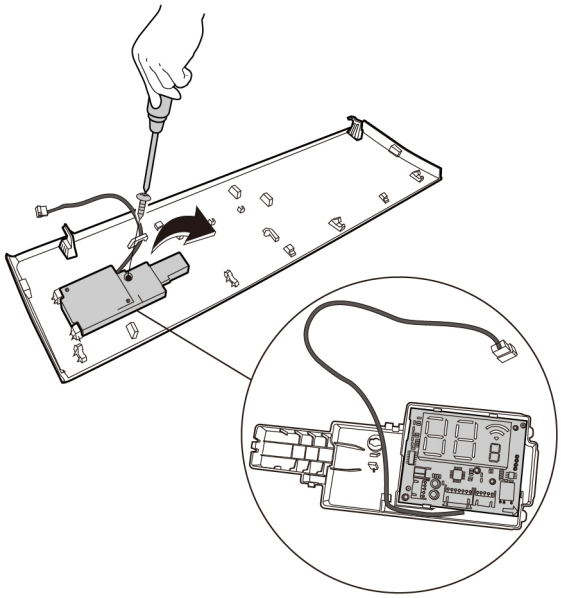 CJ_AG_012 |

**Note: This section is for reference only. Actual unit appearance may vary.**

## 2.2 Electrical parts (Antistatic gloves must be worn.)

**Note: Remove the front panel (refer to 1. Front panel) before disassembling electrical parts.**

| Procedure | Illustration |
|---|---|
| 1) Remove one fixing screw of electrical control box subassembly. (see CJ_AG_013).<br>(If you want to repair the electrical control box components, perform the first step;If you want to repair the main control board assembly, perform steps 2 to 5 below.) | 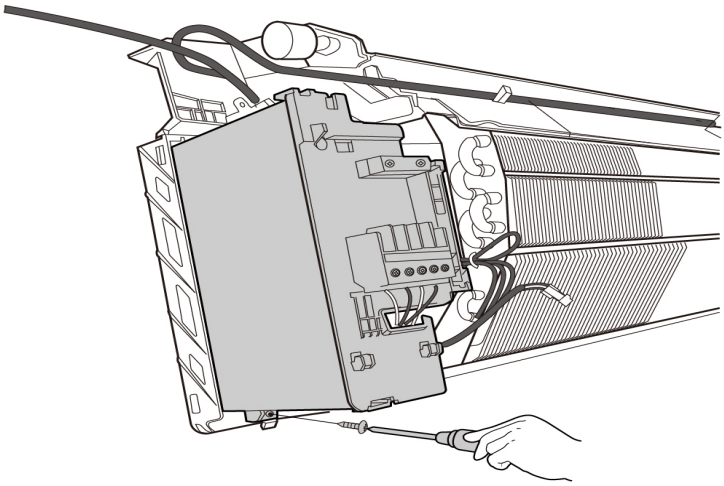<br>**CJ_AG_013** |
| 2) Cut the ribbon by a shear, then pull out the coil temperature sensor (T2) (see CJ_AG_014).<br>3) Remove one fixing screw of the electronic control box and two screws used for the ground connection (see CJ_AG_014). | 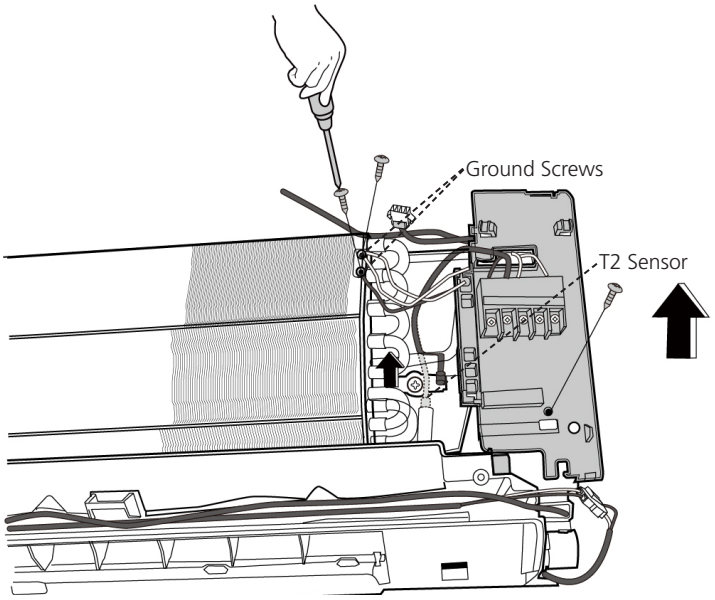<br>**CJ_AG_014** |

**Note: This section is for reference only. Actual unit appearance may vary.**

| Procedure | Illustration |
| --- | --- |
| 4) Pull out the electrical main board along the direction indicated in right image. (see CJ_AG_015). | 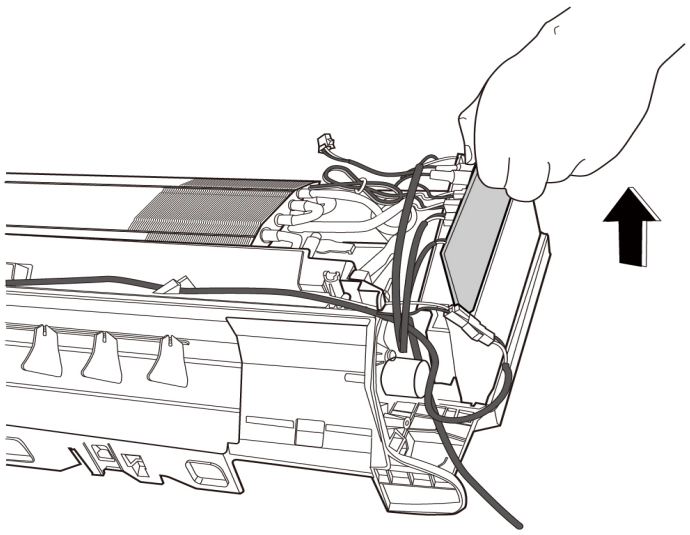 CJ_AG_015 |
| 5) Disconnect the connectors and remove main control board. (see CJ_AG_016). | 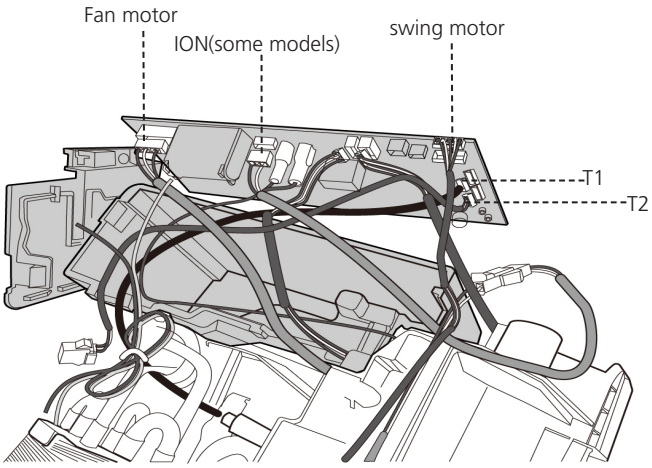  CJ_AG_016 |

**Note: This section is for reference only. Actual unit appearance may vary.**

## 2.3 Evaporator

**Note: Remove the front panel and electrical parts (refer to 1. Front panel and 2. Electrical parts) before disassembling evaporator.**

| Procedure | Illustration |
|---|---|
| 1) Disassemble the pipe holder located at the rear of the unit (see CJ_AG_017). | 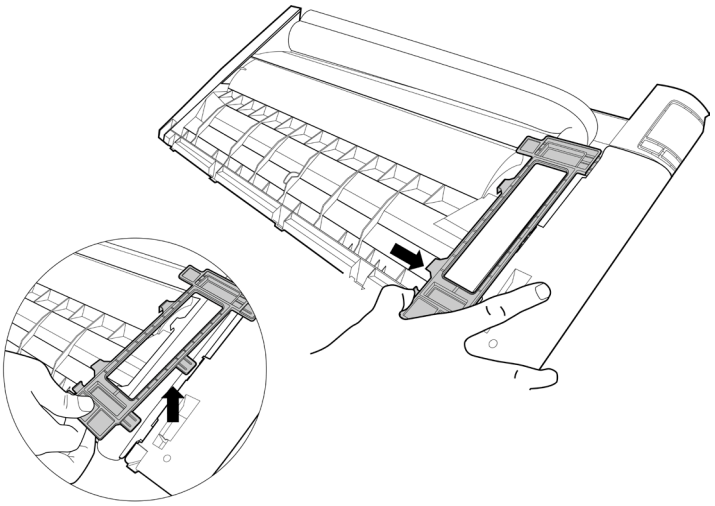 CJ_AG_017 |
| 2) Remove the 1 screw on the evaporator located at the fixed plate (see CJ_AG_018). | 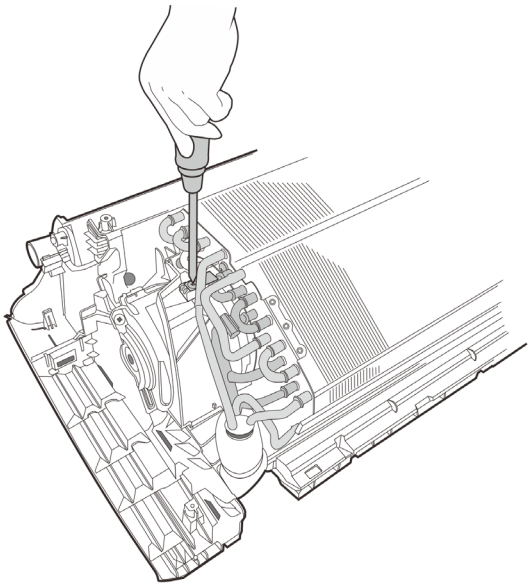 CJ_AG_018 |

**Note: This section is for reference only. Actual unit appearance may vary.**

| Procedure | Illustration |
| --- | --- |
| 3) Remove 1 screw and release the hook on the evaporator (see CJ_AG_019). | 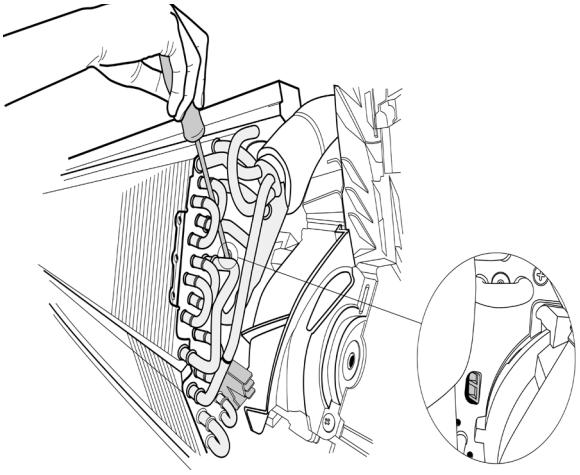 CJ_AG_019 |
| 4) Remote the 2 screws on the evaporator located at the fixed plate (see CJ_AG_020). | 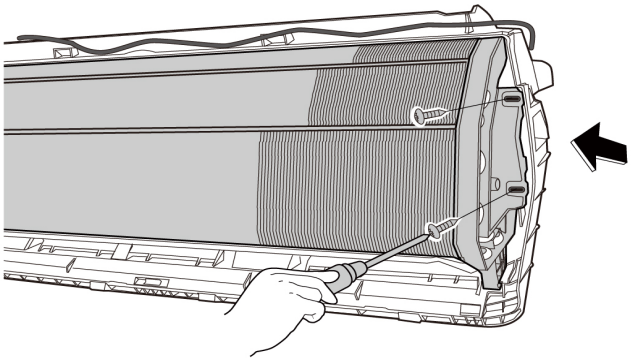 CJ_AG_020 |
| 5) Pull out the evaporator (see CJ_AG_021). | 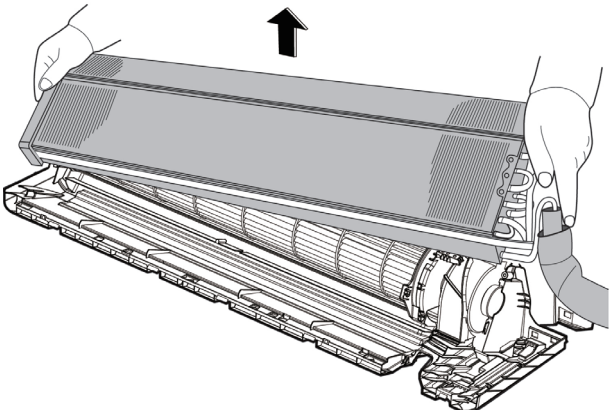 CJ_AG_021 |

**Note: This section is for reference only. Actual unit appearance may vary.**

## 2.4 Fan motor and fan

**Note: Remove the front panel, electrical parts and evaporator (refer to 1. Front panel, 2. Electrical parts, and 3. Evaporator). before disassembling fan motor and fan.**

| Procedure | Illustration |
|---|---|
| 1) Remove the two screws and remove the fixing board of the fan motor (see CJ_AG_022). | 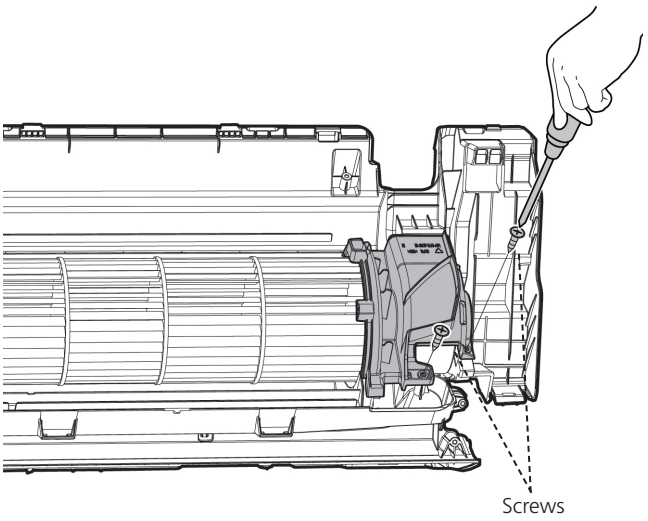 **CJ_AG_022** |
| 2) Remove the bearing sleeve (see CJ_AG_023). | 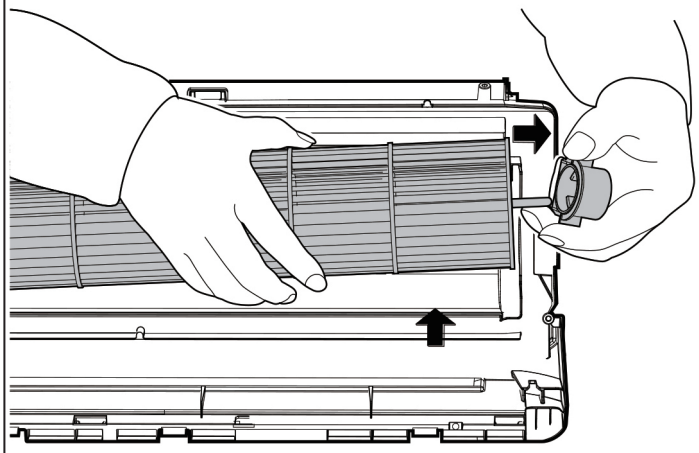 **CJ_AG_023** |

**Note: This section is for reference only. Actual unit appearance may vary.**

| Procedure | Illustration |
| --- | --- |
| 3) Remove the fixing screw (see CJ_AG_024).<br>4) Pull out the fan motor and fan assembly from the side. | 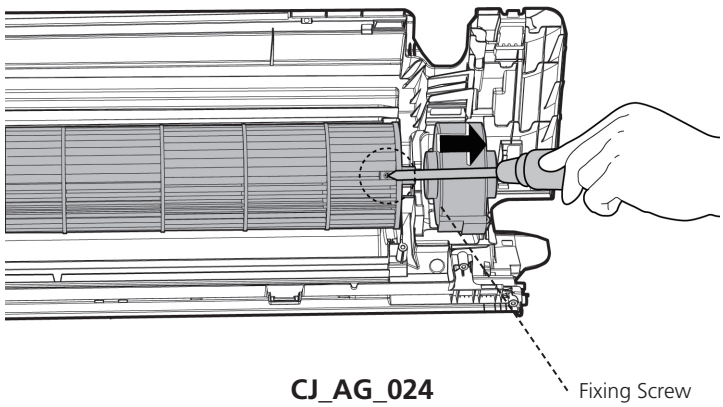<br>CJ_AG_024<br> |

**Note: This section is for reference only. Actual unit appearance may vary.**

## 2.5 Step motor

**Note: Remove the front panel and electrical parts (refer to 1. Front panel, 2. Electrical parts) before disassembling step motor.**

| Procedure | Illustration |
|---|---|
| 1) Remove the two screws, then remove the horizontal swing motor(see CJ_AG_025). | 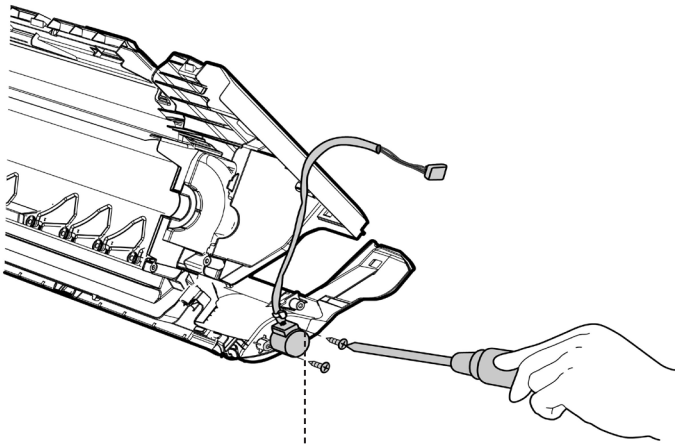 **CJ_AG_025** |
| 2) Remove 1 screw, then remove the vertical swing motor (see CJ_AG_026).(for some units)<br>3) Remove 1 screw, then remove the ionizer generator (see CJ_AG_026).(for some units) | 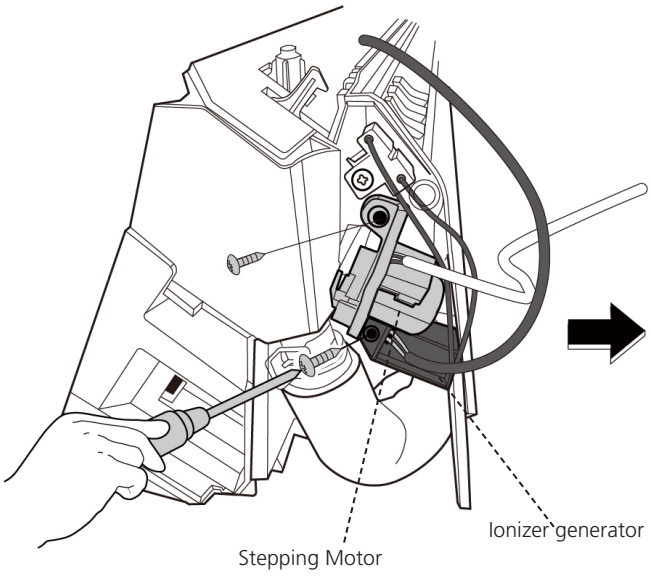 **CJ_AG_026** |

**Note: This section is for reference only. Actual unit appearance may vary.**

## 2.6 Drain Hose

| Procedure | Illustration |
|---|---|
| 1) Rotate the fixed wire clockwise indicated in right image (see CJ_AG_027). | 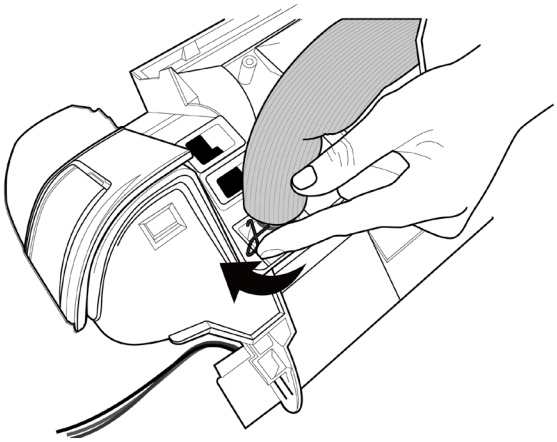 CJ_AG_027 |
| 2) Pull up the drain hose to remove it (see CJ_AG_028). | 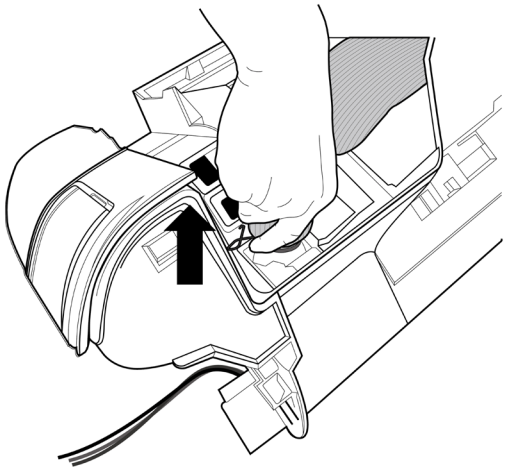 CJ_AG_028 |

**Note: This section is for reference only. Actual unit appearance may vary.**

# Outdoor Unit Disassembly

## Contents


**1. Outdoor Unit Table ..... 2**

**2. Dimension ..... 3**

**3. Outdoor Unit Disassembly ..... 16**

3.1 Panel Plate ..... 16

3.2 Electrical Parts ..... 29

3.3 Fan Assembly ..... 44

3.4 Fan Motor ..... 45

3.5 Sound blanket ..... 46

3.6 Four-way valve ..... 47

3.7 Compressor ..... 48

# 1. Outdoor Unit Disassembly

## 1.1 Outdoor Unit Table

| Outdoor Unit Model | Panel Plate | PCB Board |
|---|---|---|
| MOX331-12HFN7-QRD6GW | X330 | PCB Board 10 |

## 2. Dimension

### 2.1. Panel Plate X130

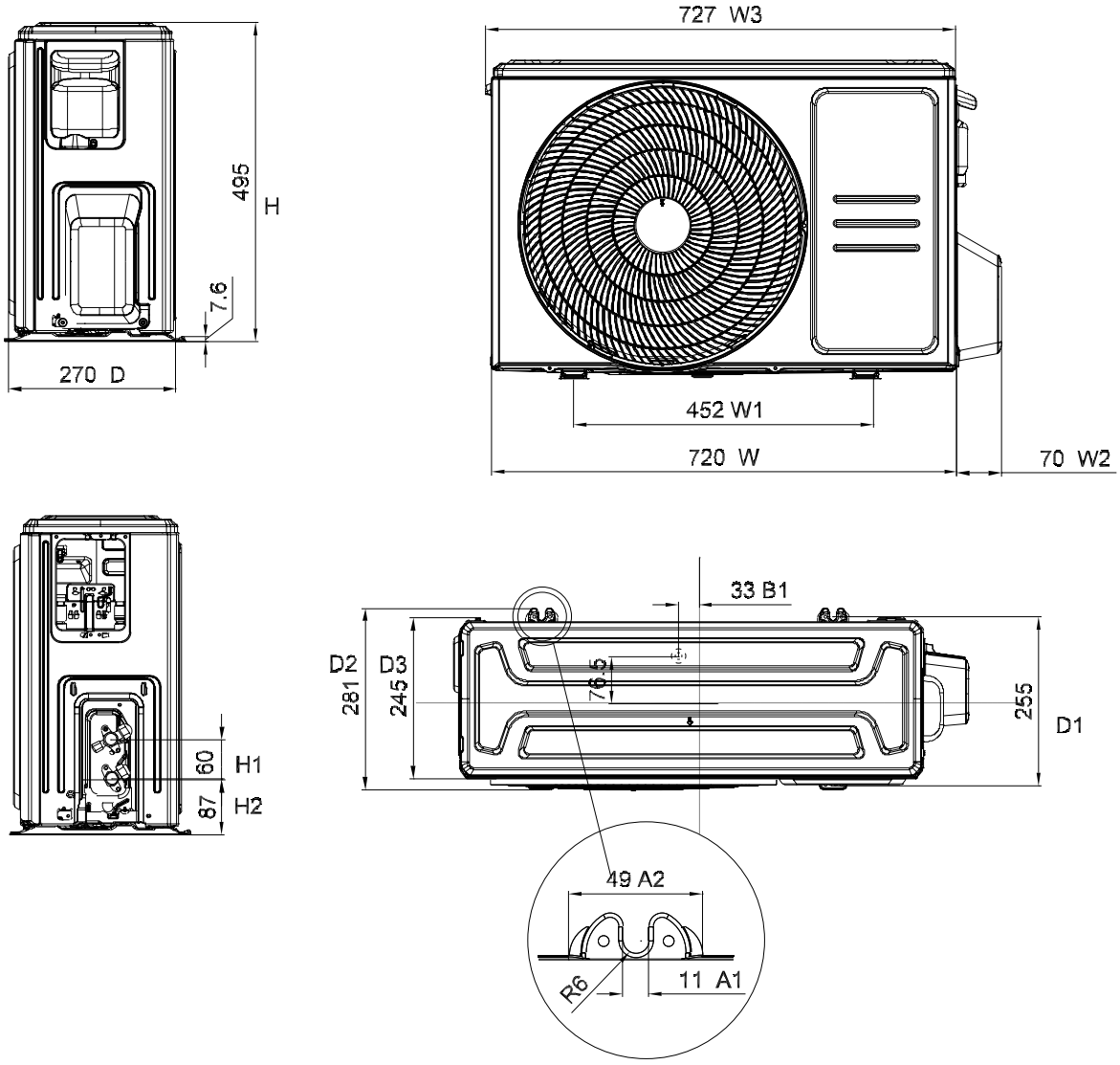

## For US models(Rounded grille):

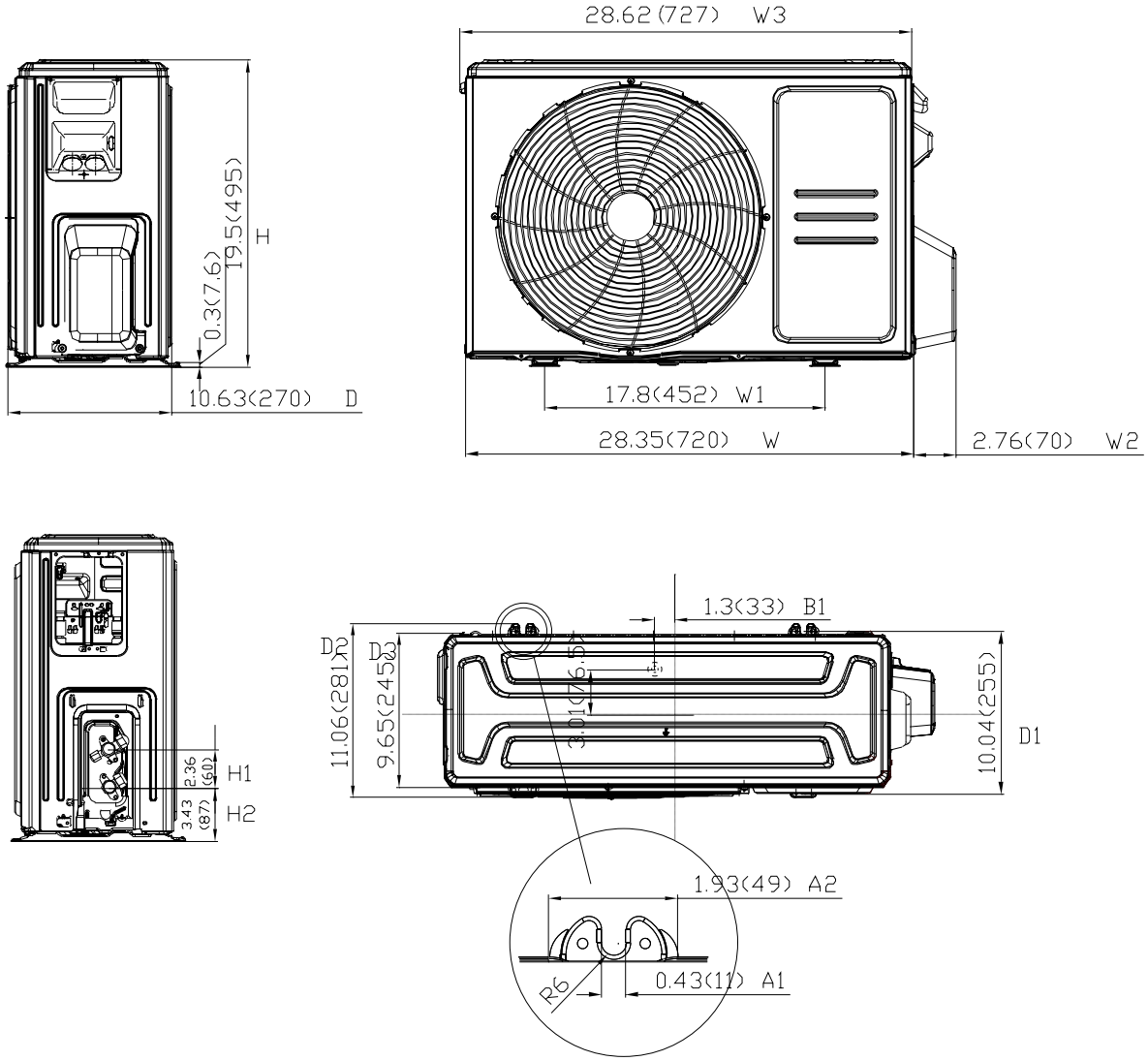

## 2.2. Panel Plate X230

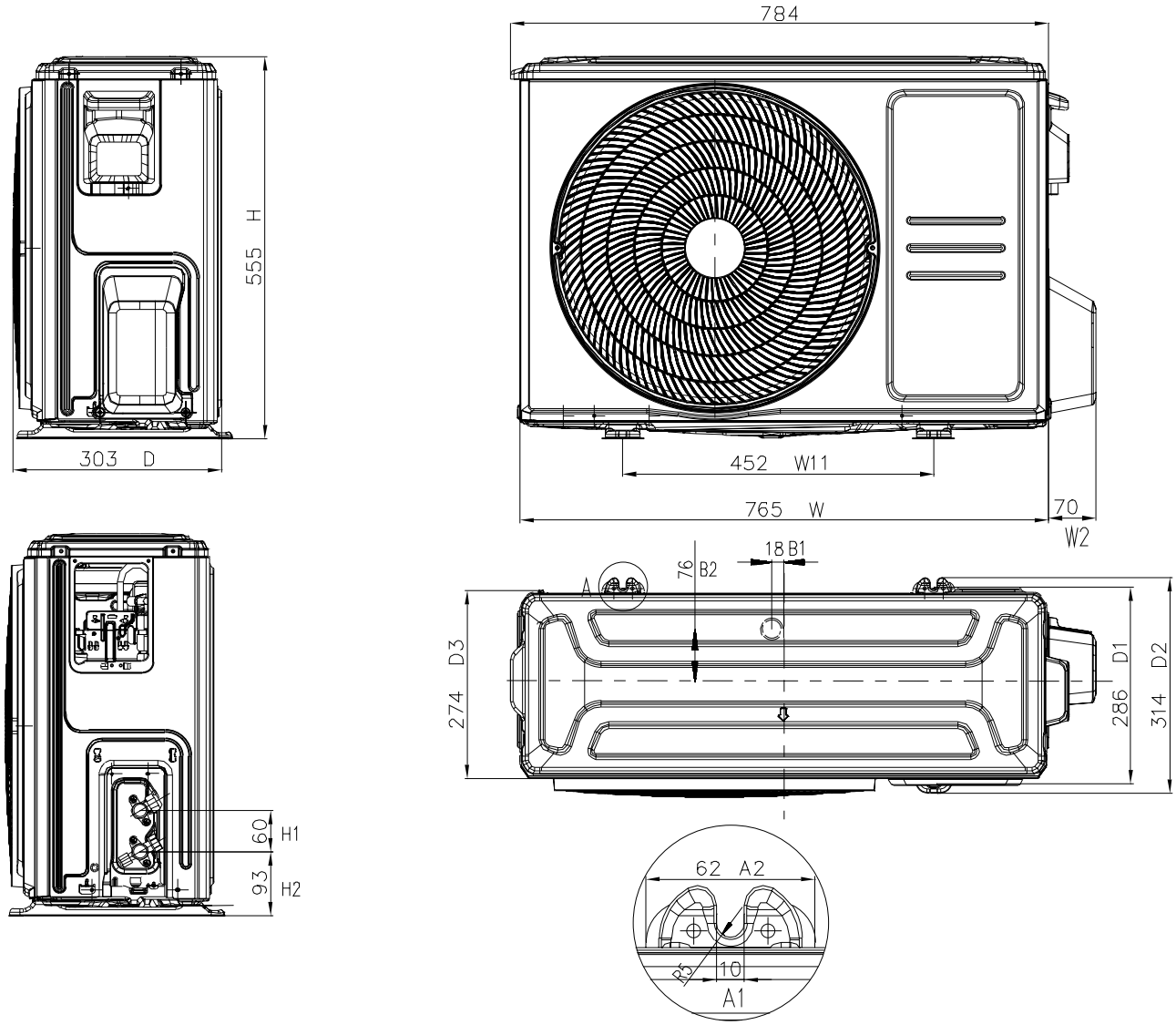

## For US models(Rounded grille):

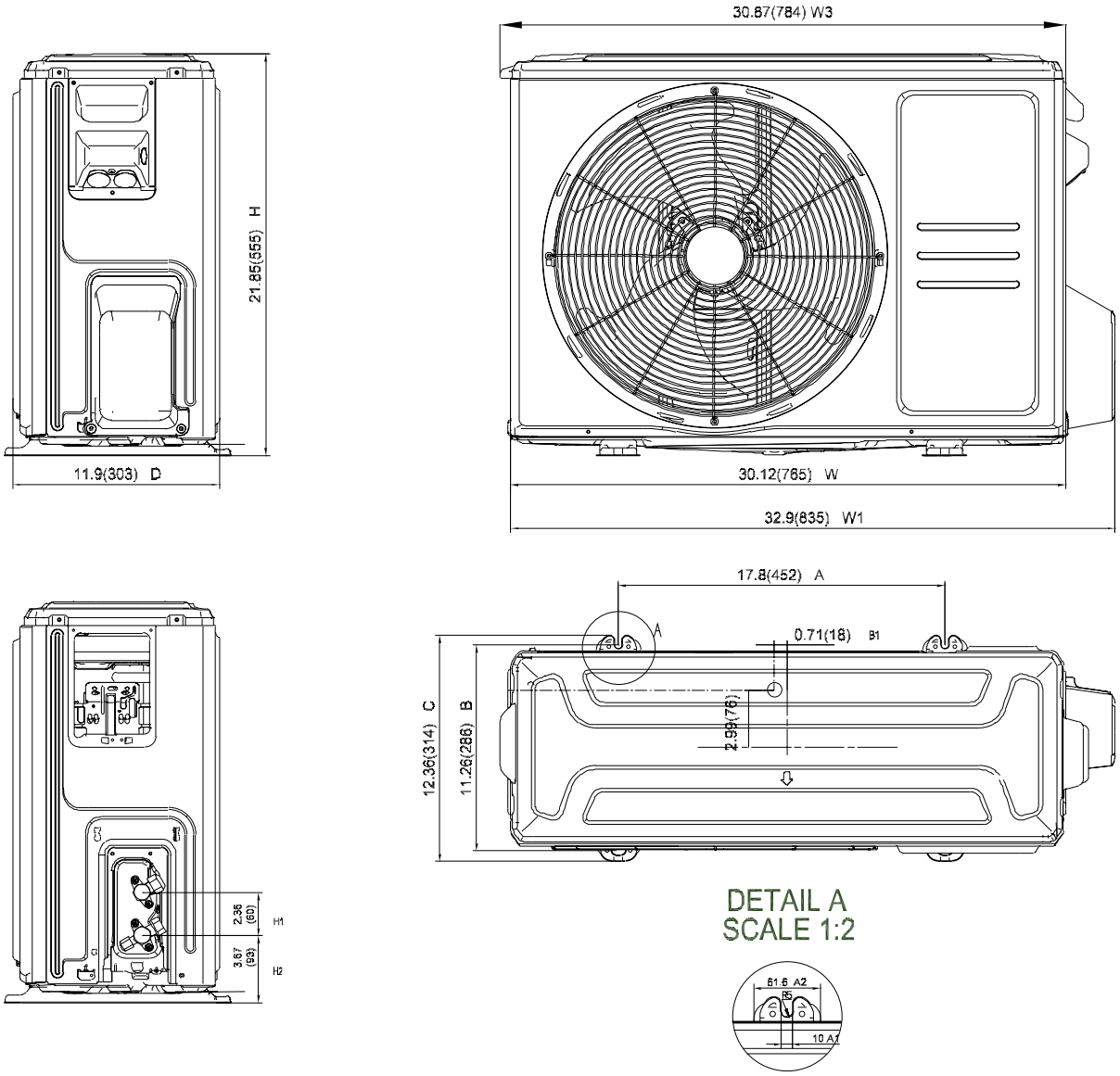

## For US models(Square grille):

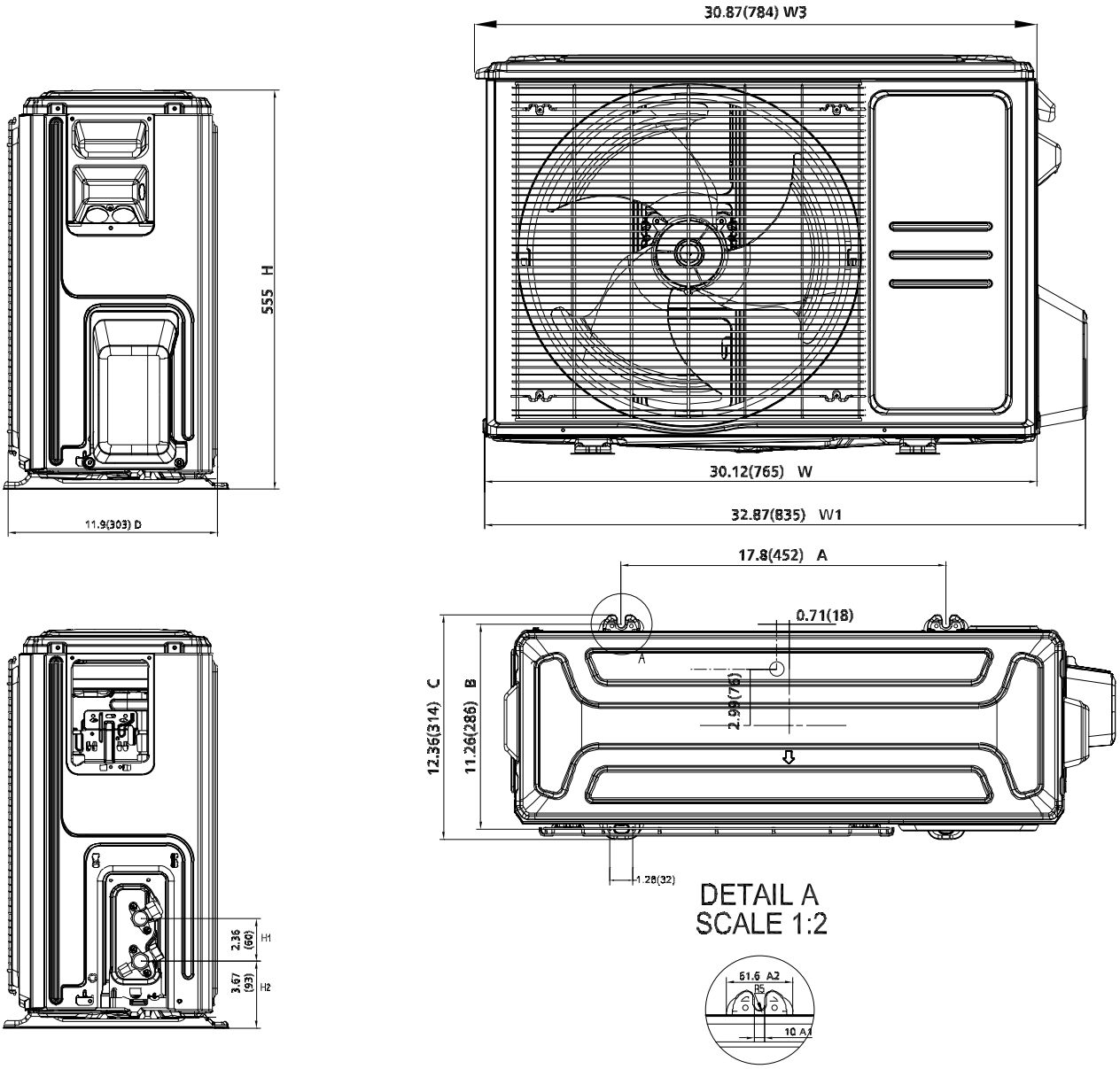

## 2.3. Panel Plate X330

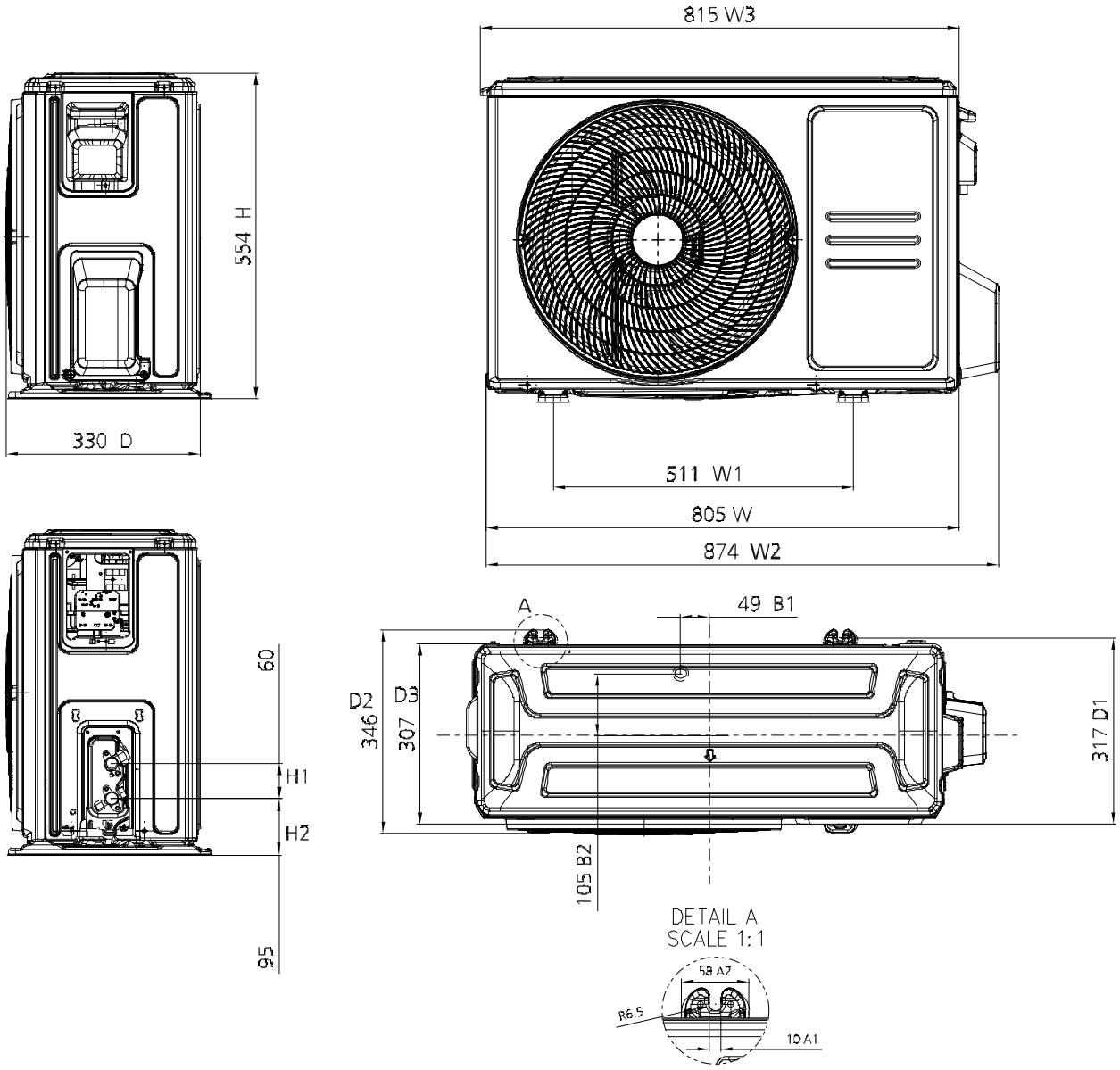

## For US models(Rounded grille):

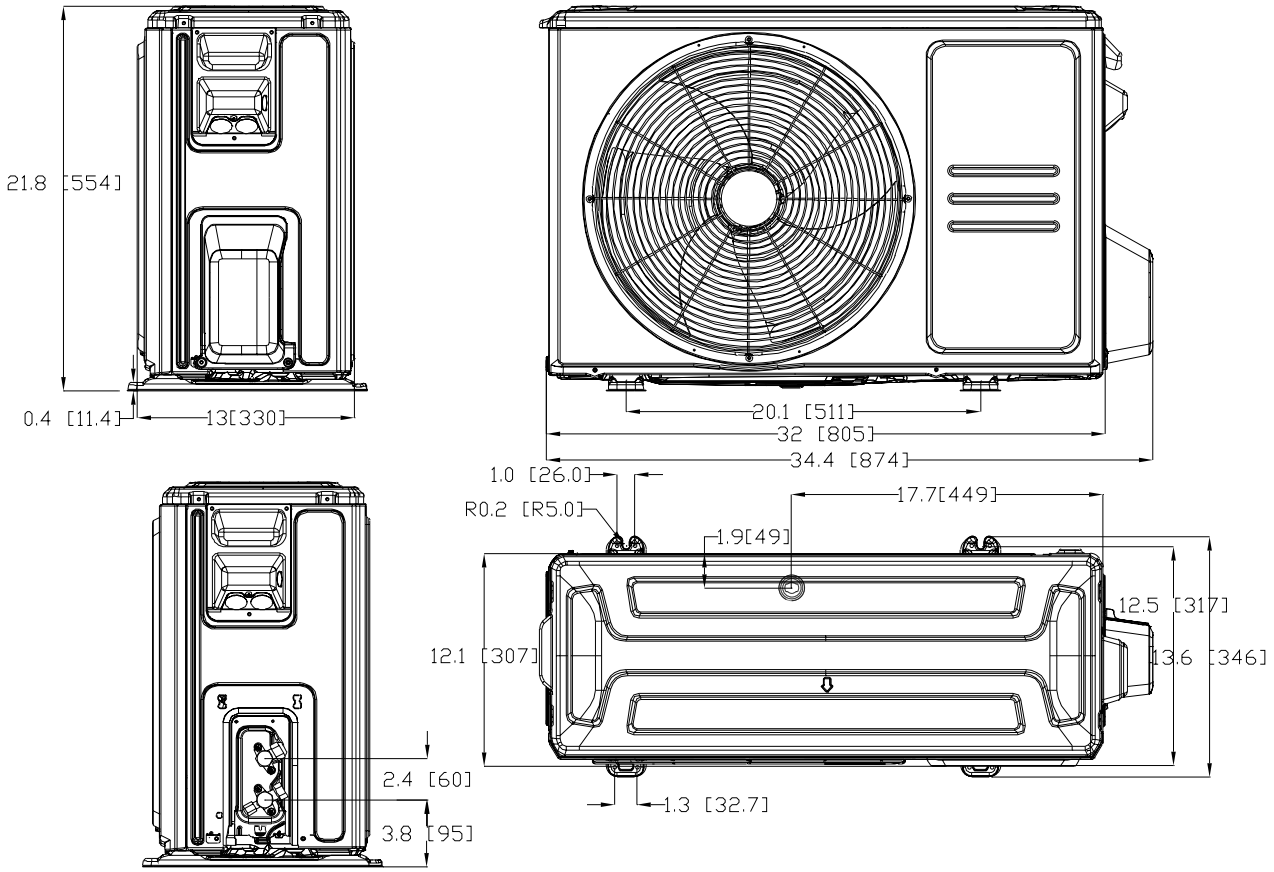

## For US models(Square grille):

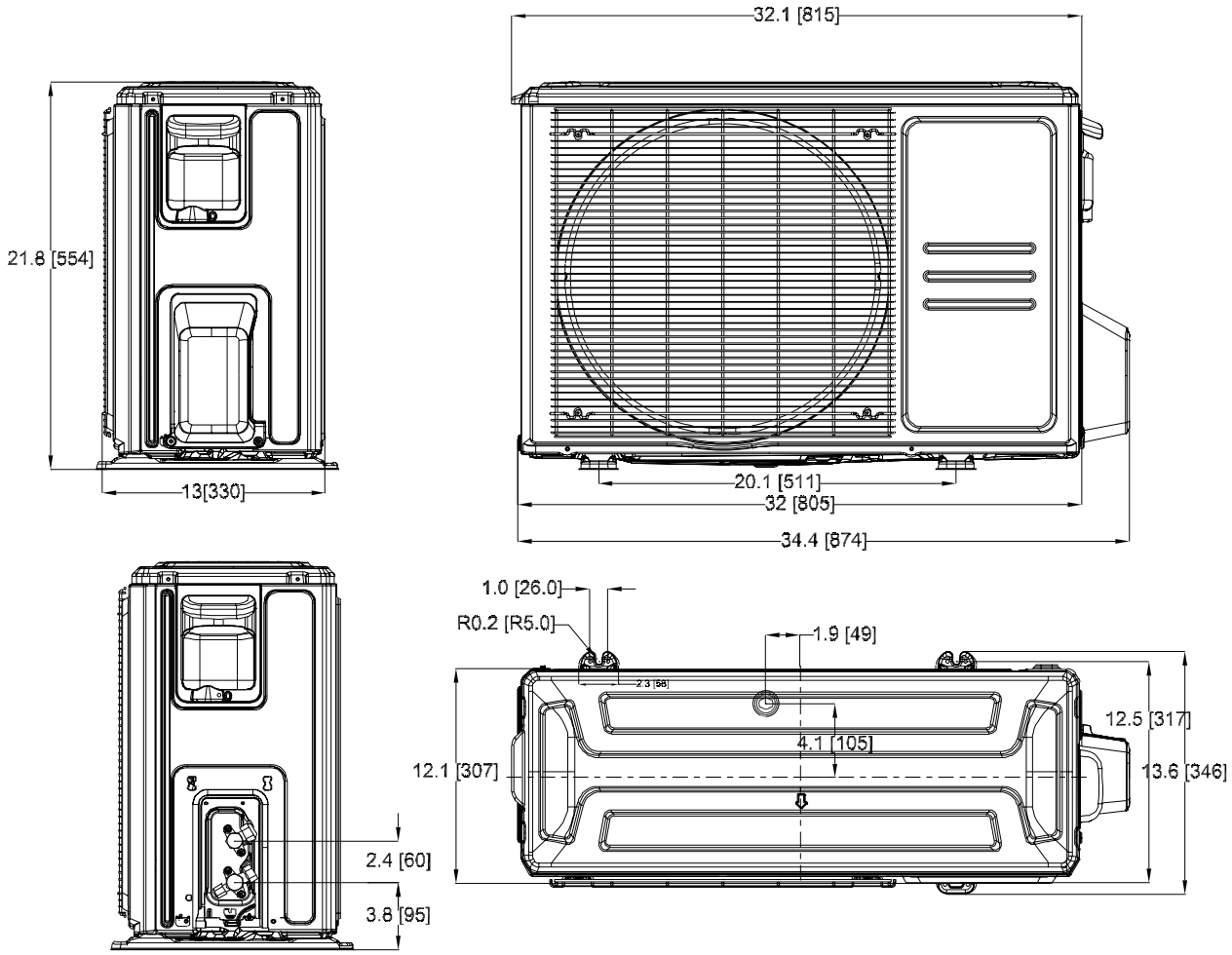

## 2.4. Panel Plate X430

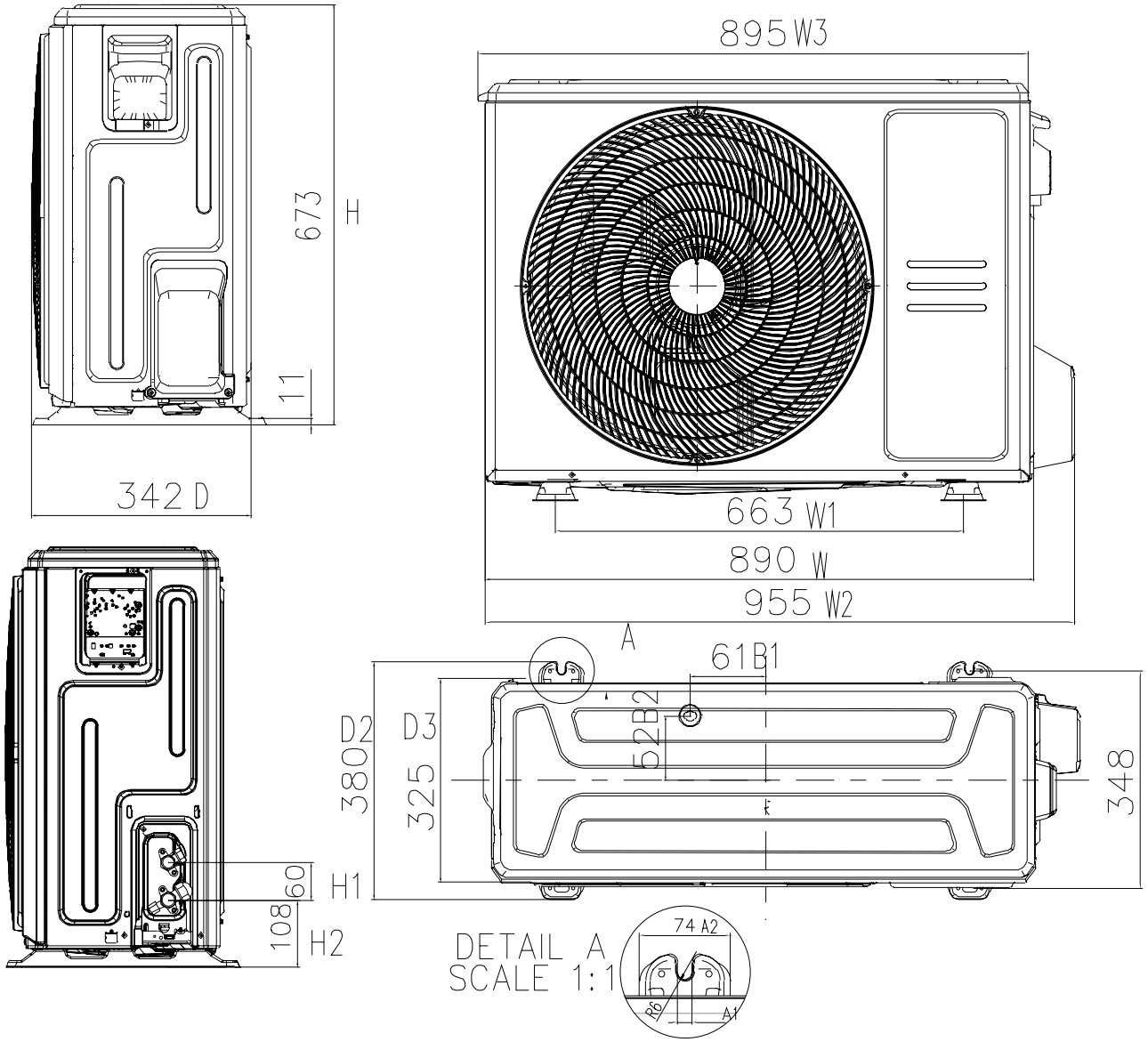

**For US models(Rounded grille):**

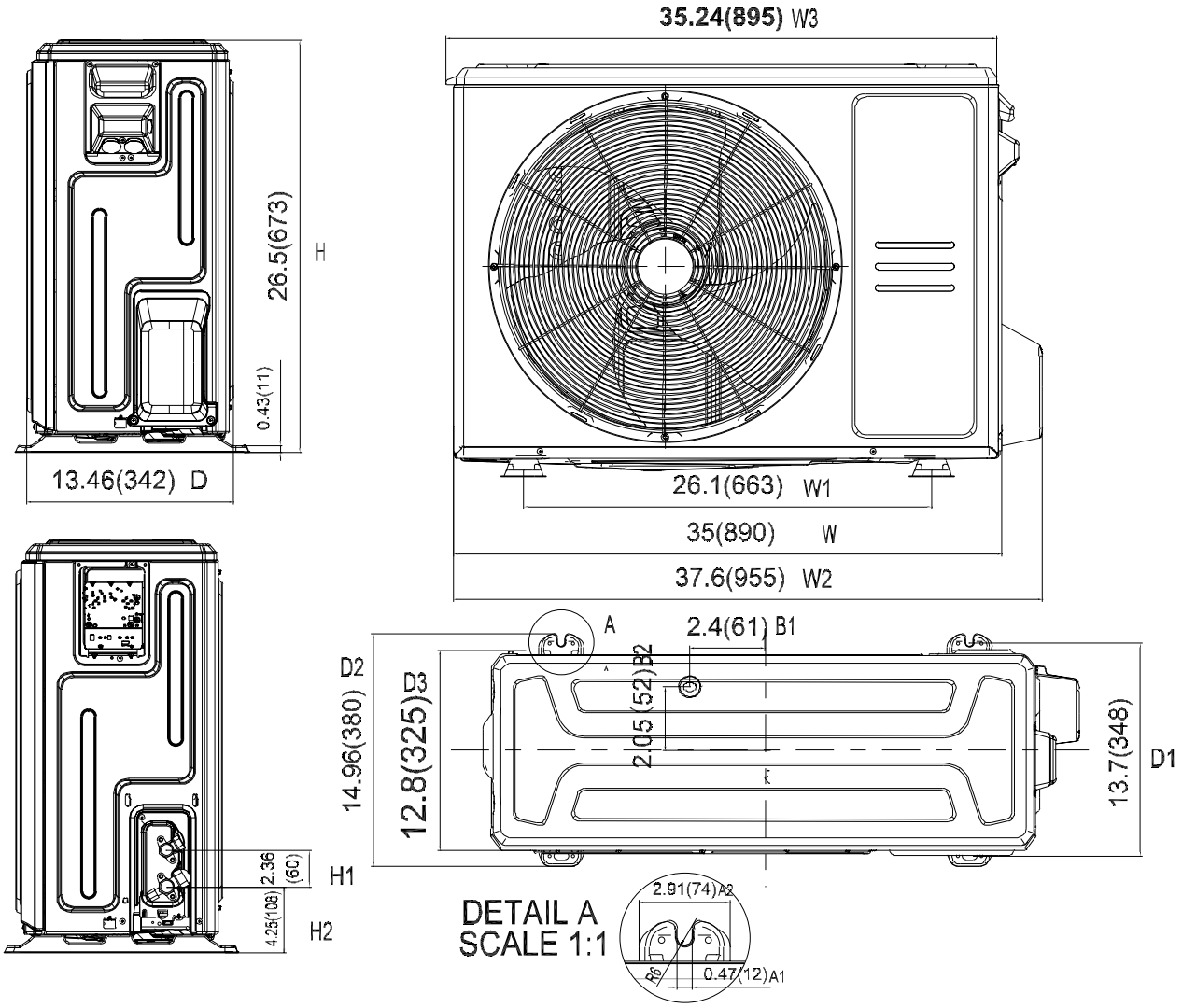

**For US models(Square grille):**

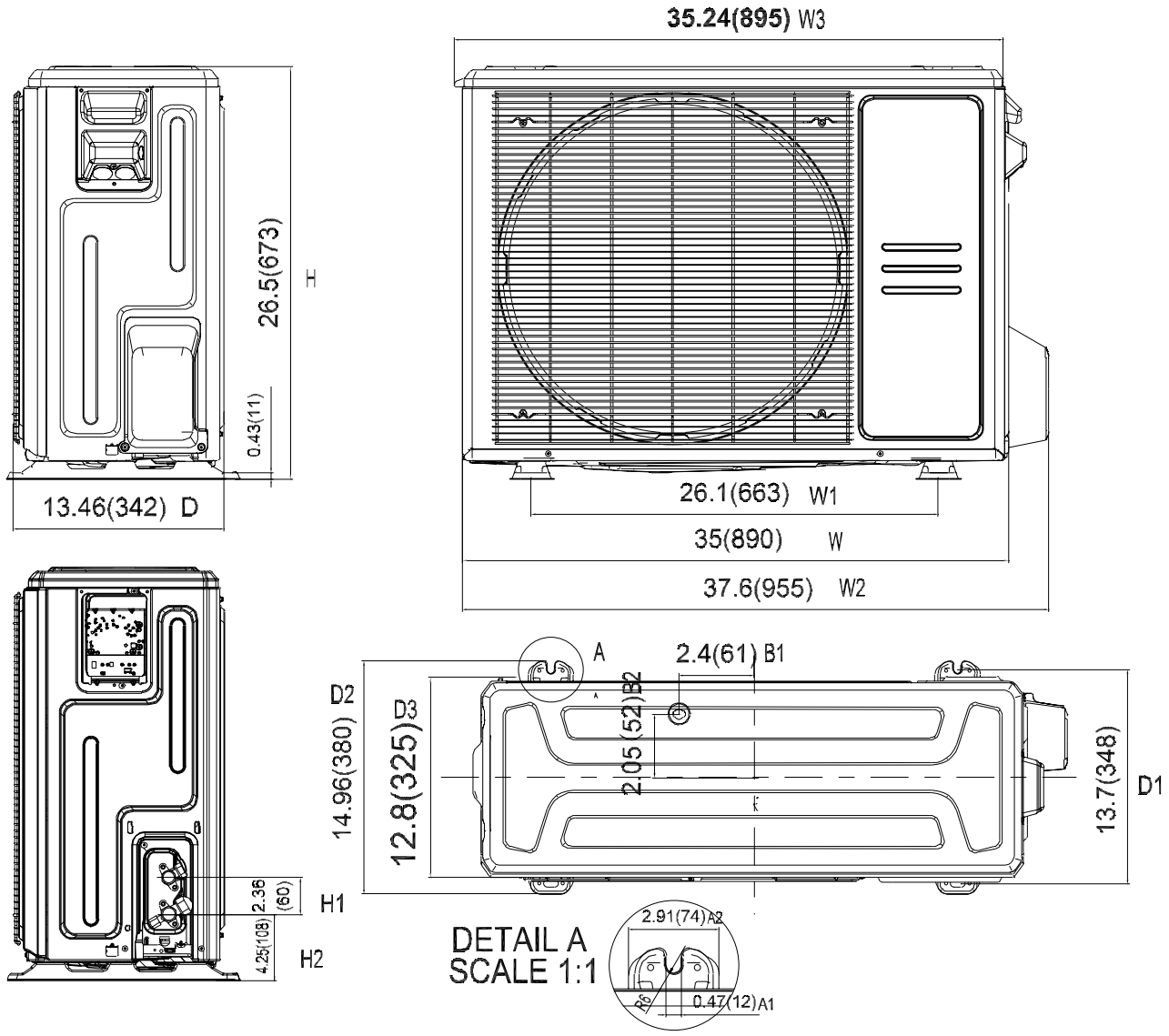

## 2.5. Panel Plate D30

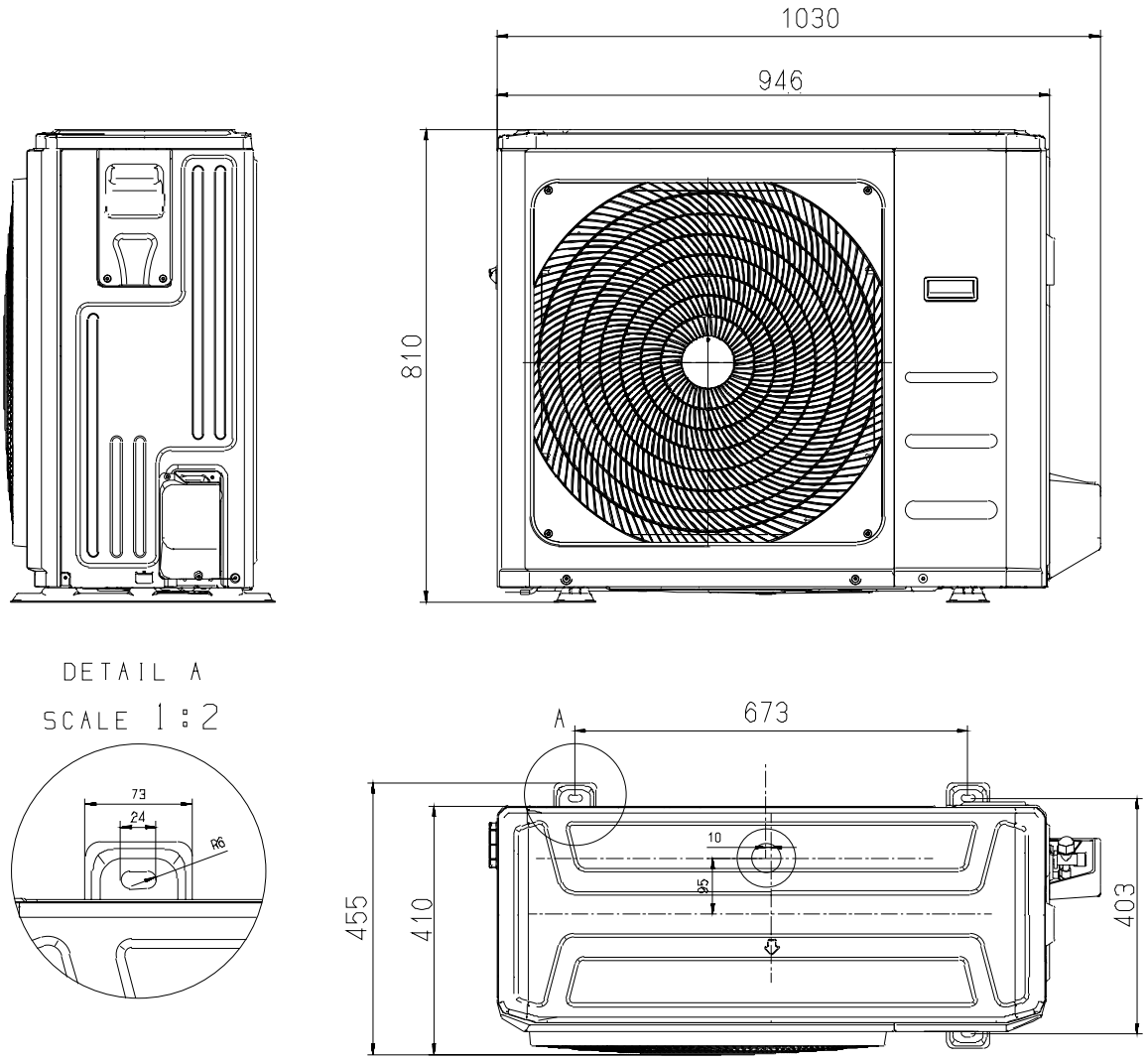

## For US models:

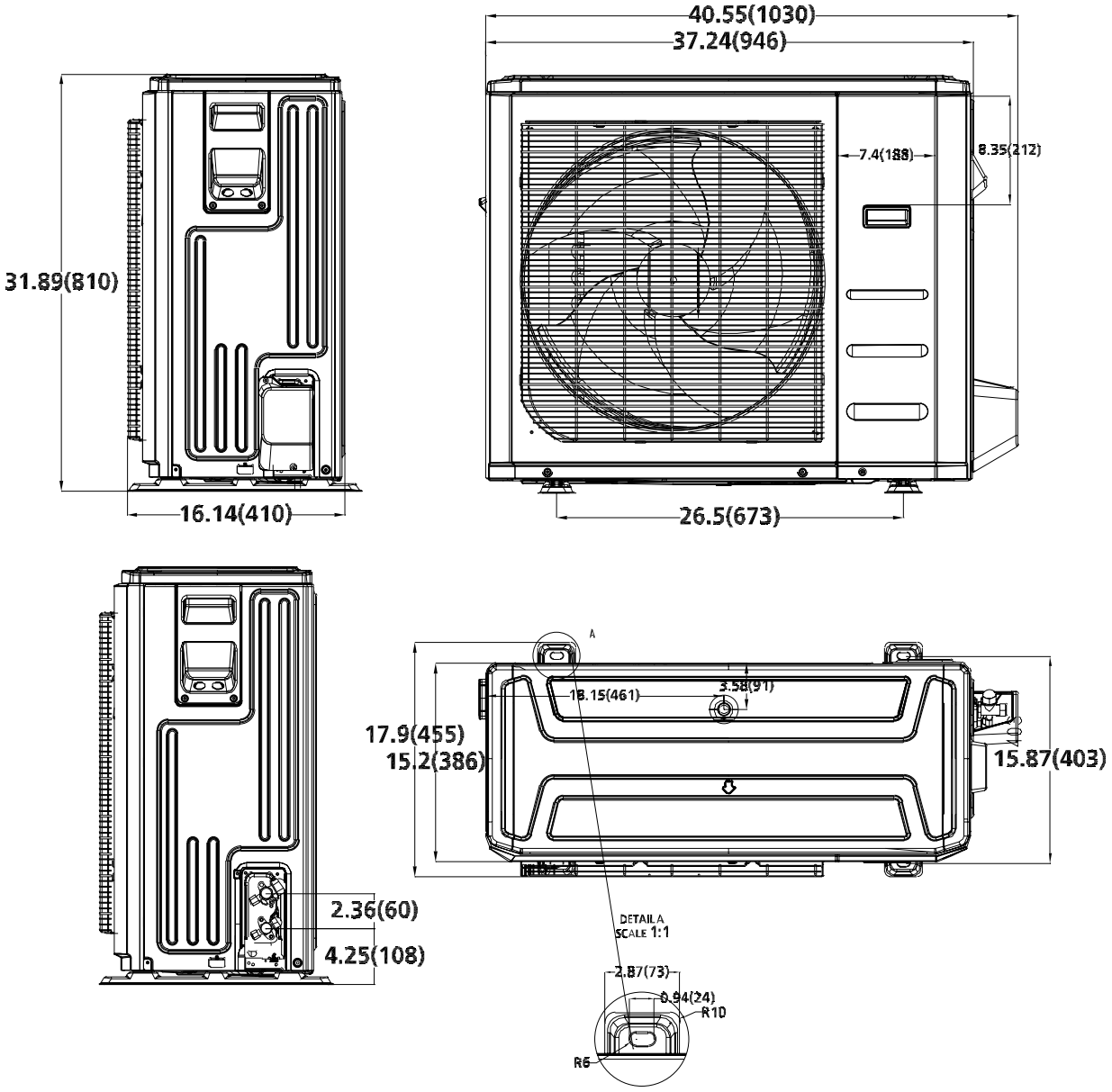

# 3. Outdoor Unit Disassembly

## 3.1 Panel Plate

### 1. D30

| Procedure | Illustration |
|---|---|
| 1) Turn off the air conditioner and the power breaker.<br>2) Remove the screws of the big handle and then remove the big handle (2 screws) (see CJ_D30_001).<br><br>3) Remove the screws of the top cover and then remove the top cover (4 screws). Two of the screws is located underneath the big handle (see CJ_ D30_002). | 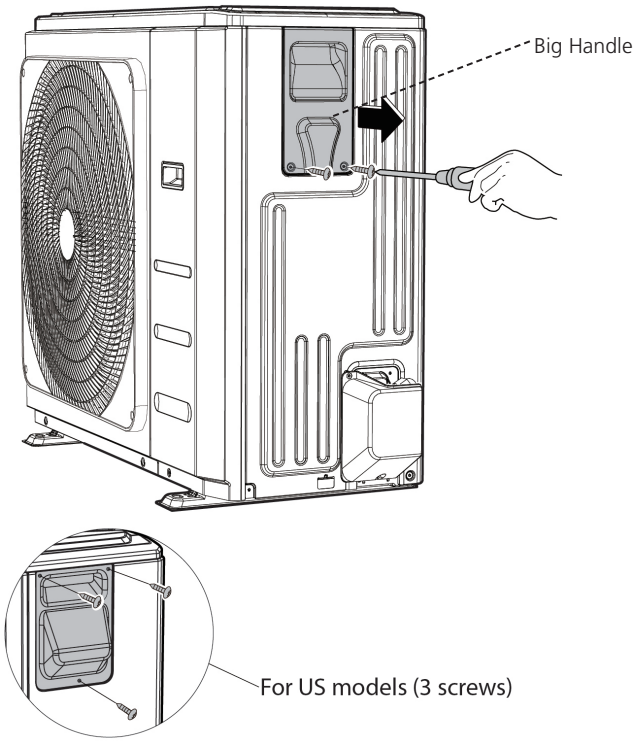<br>**CJ_D30_001**<br>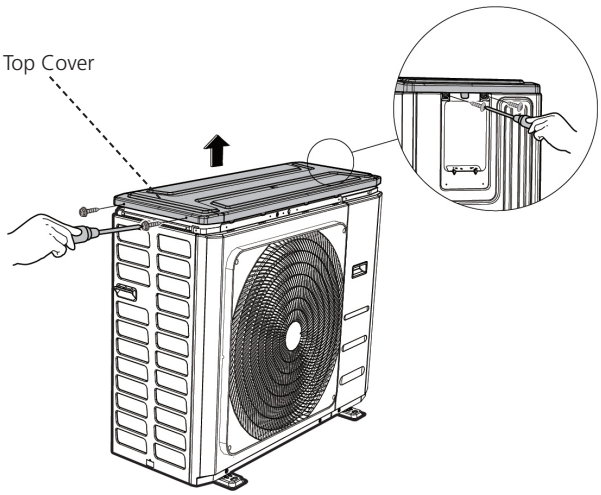<br>**CJ_D30_002** |

**Note: This section is for reference only. Actual unit appearance may vary.**

| Procedure | Illustration |
| --- | --- |
| 4) Remove the screws of the front right panel and then remove the front right panel (2 screws) (see CJ_D30_003). | 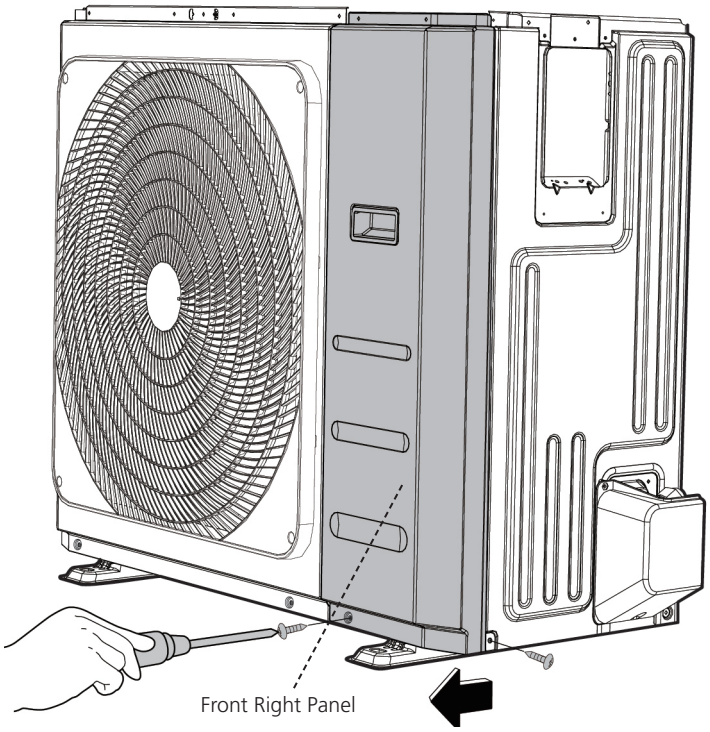 CJ_D30_003 |
| 5) Remove the screws of the front panel and then remove the front panel (9 screws) (see CJ_D30_004). | 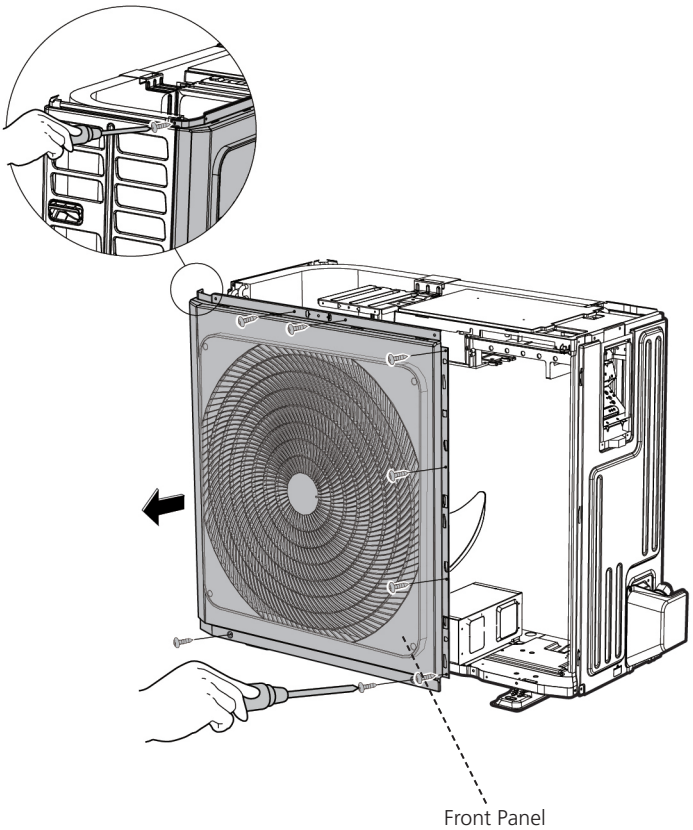 CJ_D30_004 |

**Note: This section is for reference only. Actual unit appearance may vary.**

| Procedure | Illustration |
| --- | --- |
| 6) Remove the screws of water collecting cover and then remove the water collecting cover (2 screw) (see CJ_D30_005). | 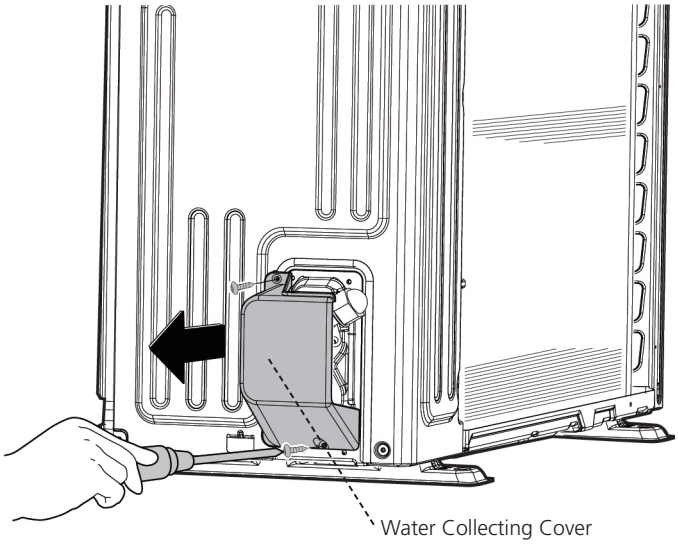 **CJ_D30_005** |
| 7) Remove the screws of the rear net and then remove the rear net (2 screws) (see CJ_D30_006). (for some models) | 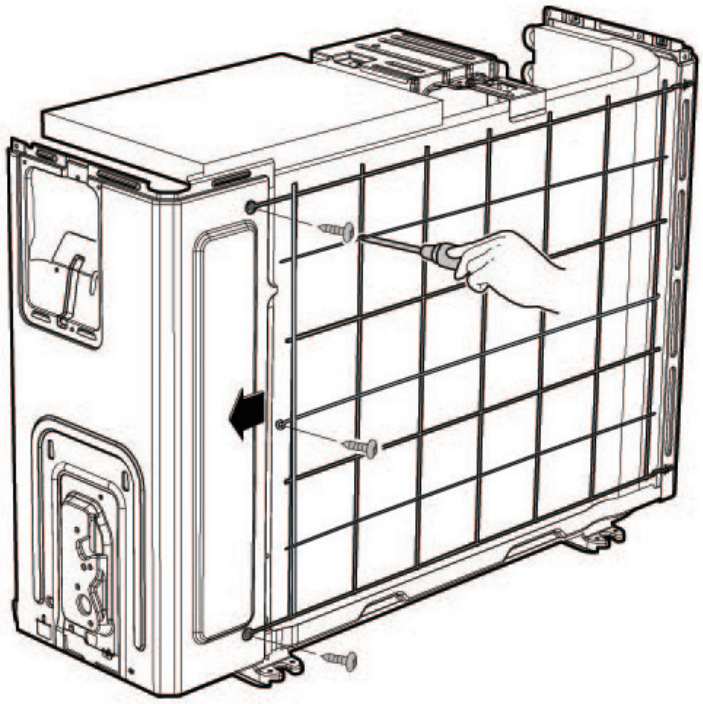 **CJ_D30_006** |

**Note: This section is for reference only. Actual unit appearance may vary.**

| Procedure | Illustration |
| --- | --- |
| 8) Remove the screws of the right panel and then remove the right panel (8 screws) (see CJ_D30_007). | 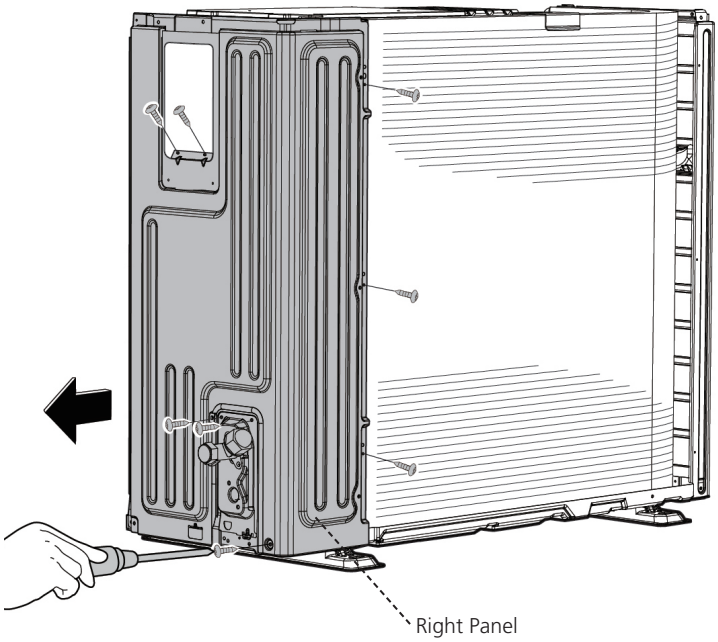 CJ_D30_007 |

**Note: This section is for reference only. Actual unit appearance may vary.**

## 2. X130

| Procedure | Illustration |
|---|---|
| 1) Turn off the air conditioner and the power breaker.<br>2) Remove the screw of the big handle and then remove the big handle (1 screw) (see CJ_X130_001). | 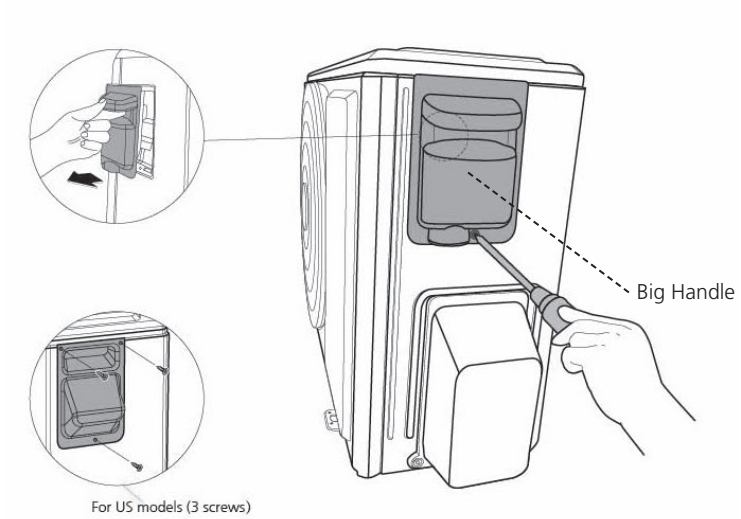<br>**CJ_X130_001** |
| 3) Remove the screws of the top cover and then remove the top cover (3 screws). One of the screws is located underneath the big handle (see CJ_X130_002). | 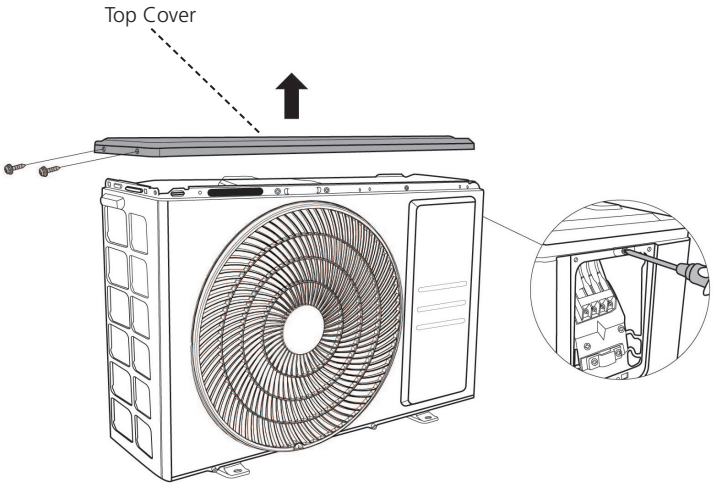<br>**CJ_X130_002** |

**Note: This section is for reference only. Actual unit appearance may vary.**

| Procedure | Illustration |
| --- | --- |
| 4) Remove the screws of water collecting cover and then remove the water collecting cover (2 screws) (see CJ_X130_003). | 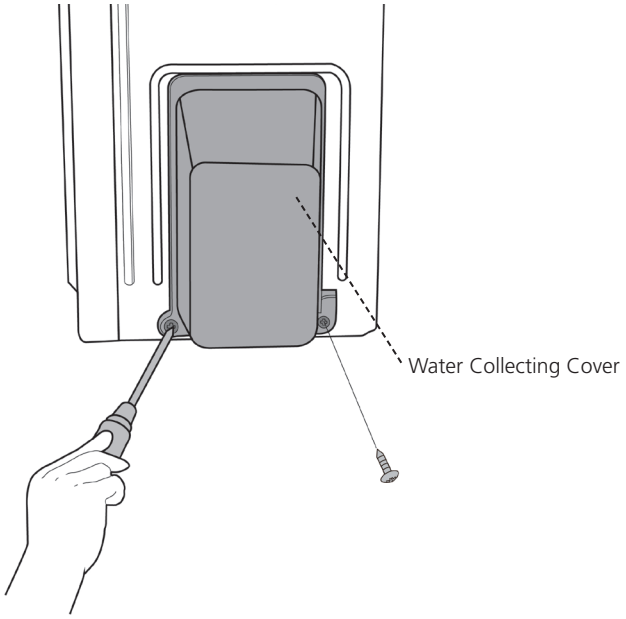 **CJ_X130_003** |
| 5) Remove the screws of the front panel and then remove the front panel (6 screws(onoff models) or 8 screws(inverter models) (see CJ_X130_004). | 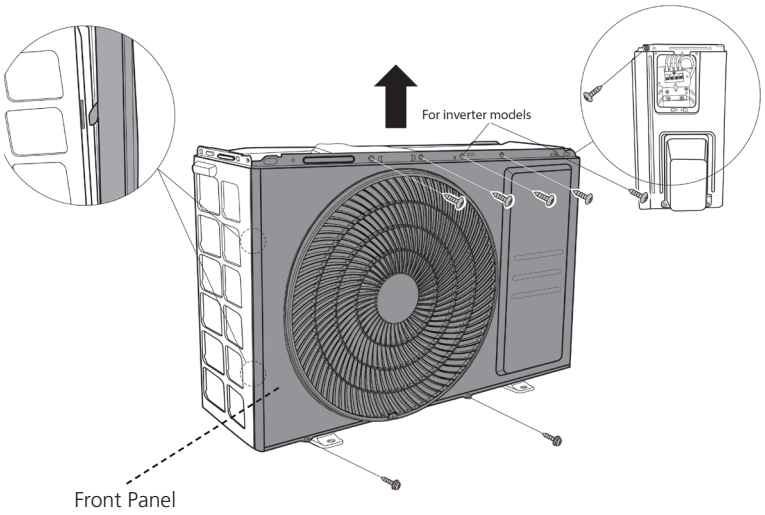 **CJ_X130_004** |

**Note: This section is for reference only. Actual unit appearance may vary.**

| Procedure | Illustration |
| --- | --- |
| 6) Remove the screws of the right panel and then remove the right panel (5 screws) (see CJ_X130_005). | 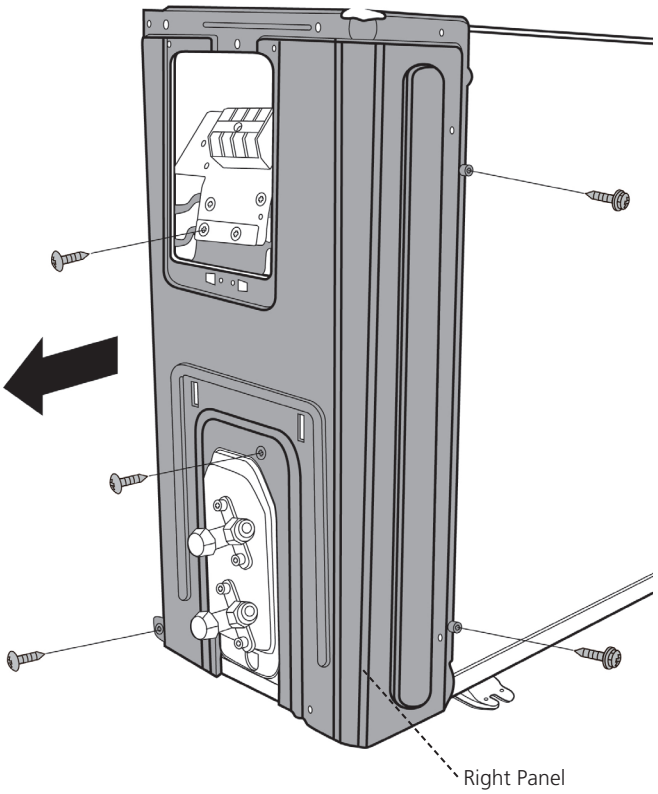 **CJ_X130_005** |

**Note: This section is for reference only. Actual unit appearance may vary.**

### 3. X230/X330

| Procedure | Illustration |
|---|---|
| 1) Turn off the air conditioner and the power breaker.<br>2) Remove the screw of the big handle and then remove the big handle (1 screws) (see CJ_X230_001). | 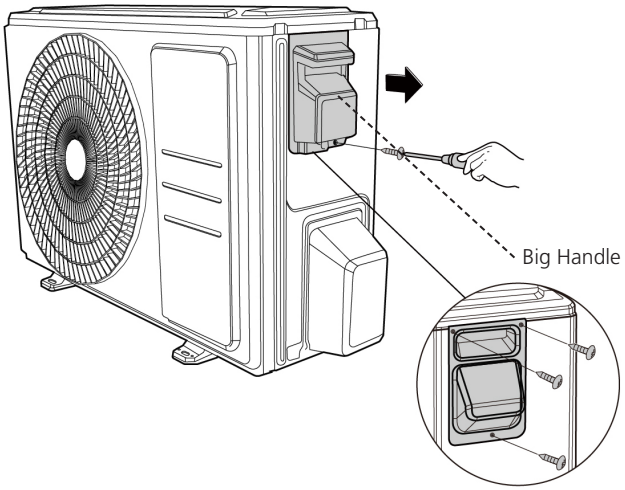<br>**CJ_X230_001** |
| 3) Remove the screws of the top cover and then remove the top cover (4 screws). One of the screws is located underneath the big handle (see CJ_X230_002). | 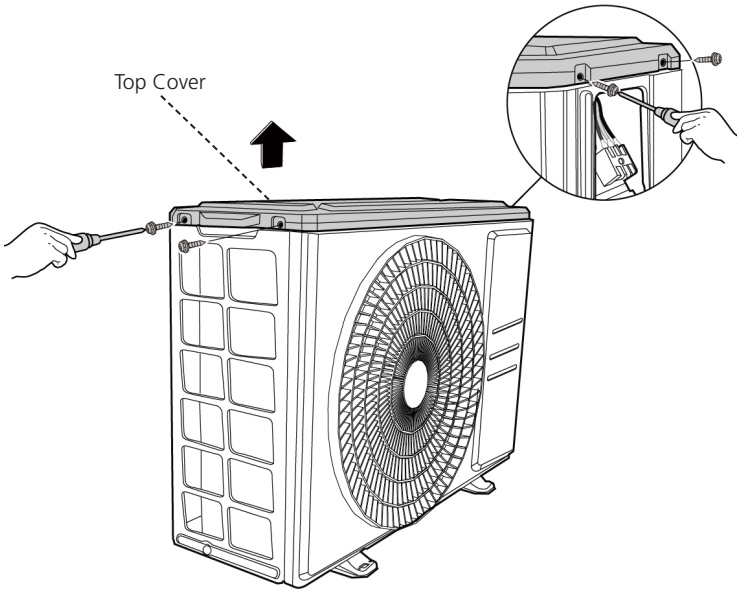<br>**CJ_X230_002** |

**Note: This section is for reference only. Actual unit appearance may vary.**

| Procedure | Illustration |
| --- | --- |
| 4) Remove the screws of water collecting cover and then remove the water collecting cover (2 screws) (see CJ_X230_003). | 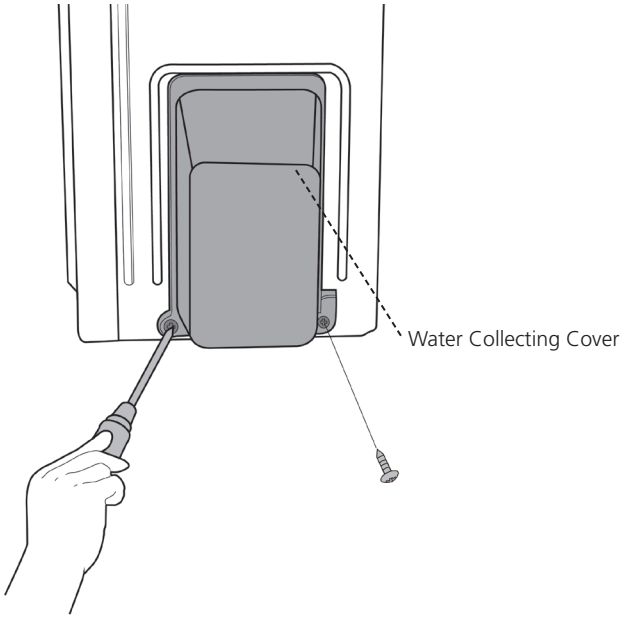 **CJ_X230_003** |
| 5) Remove the screws of the front panel and then remove the front panel (7 screws(onoff models) or 9 screws(inverter models) (see CJ_X230_004). | 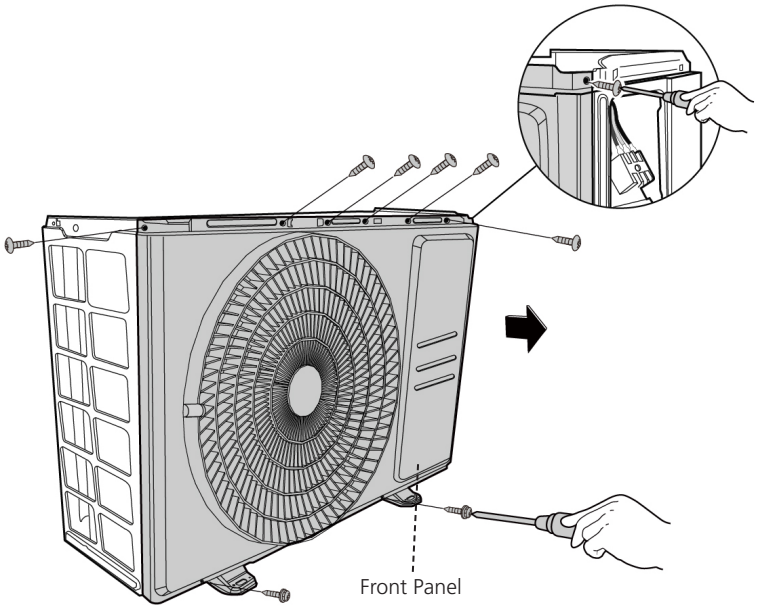 **CJ_X230_004** |

**Note: This section is for reference only. Actual unit appearance may vary.**

| Procedure | Illustration |
| --- | --- |
| 6) Remove the screws of the right panel and then remove the right panel (5 screws) (see CJ_X230_005). | 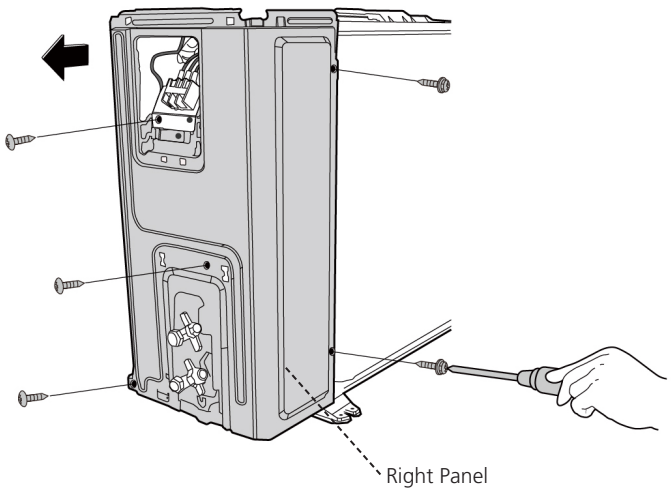 **CJ_X230_005** |

**Note: This section is for reference only. Actual unit appearance may vary.**

## 4. X430

| Procedure | Illustration |
|---|---|
| 1) Turn off the air conditioner and the power breaker.<br>2) Remove the screw of the big handle and then remove the big handle (1 screw) (see CJ_X430_001). | 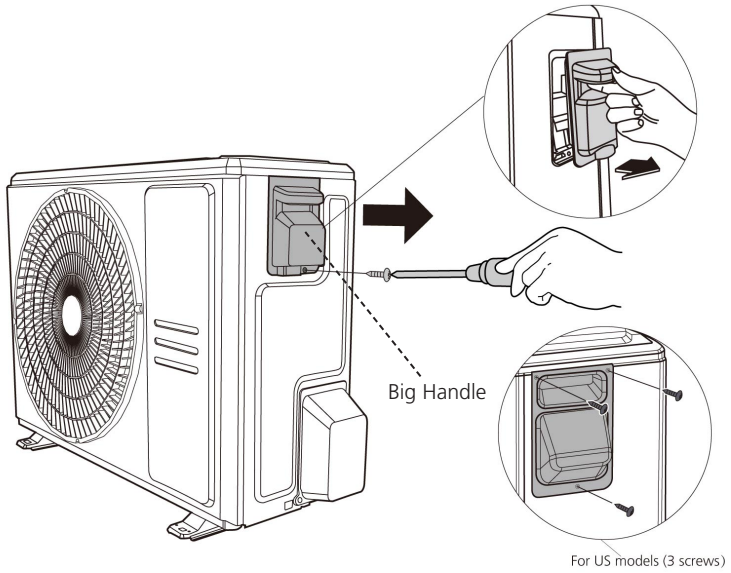<br>**CJ_X430_001** |
| 3) Remove the screws of the top cover and then remove the top cover (3 screws). One of the screws is located underneath the big handle (see CJ_X430_002). | 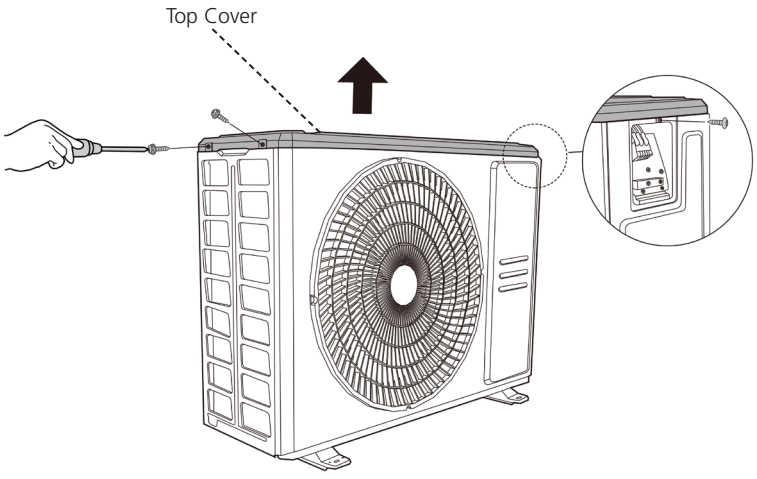<br>**CJ_X430_002** |

**Note: This section is for reference only. Actual unit appearance may vary.**

| Procedure | Illustration |
| --- | --- |
| 4) Remove the screws of water collecting cover and then remove the water collecting cover (2 screws) (see CJ_X430_003). | 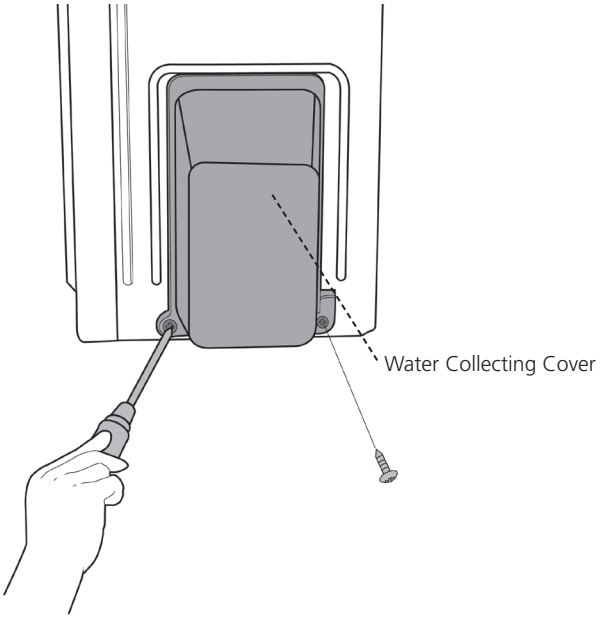 **CJ_X430_003** |
| 5) Remove the screws of the front panel and then remove the front panel (7 screws(onoff models) or 9 screws(inverter models) (see CJ_X430_004). | 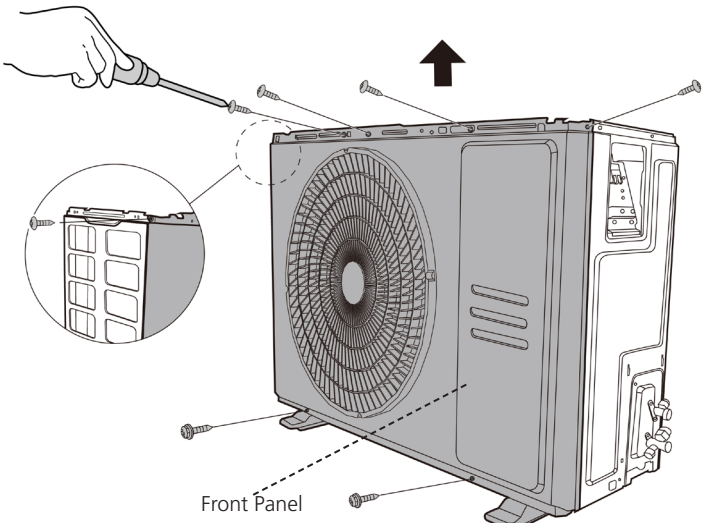 **CJ_X430_004** |

**Note: This section is for reference only. Actual unit appearance may vary.**

| Procedure | Illustration |
| --- | --- |
| 6) Remove the screws of the right panel and then remove the right panel (6 screws) (see CJ_X430_005). | 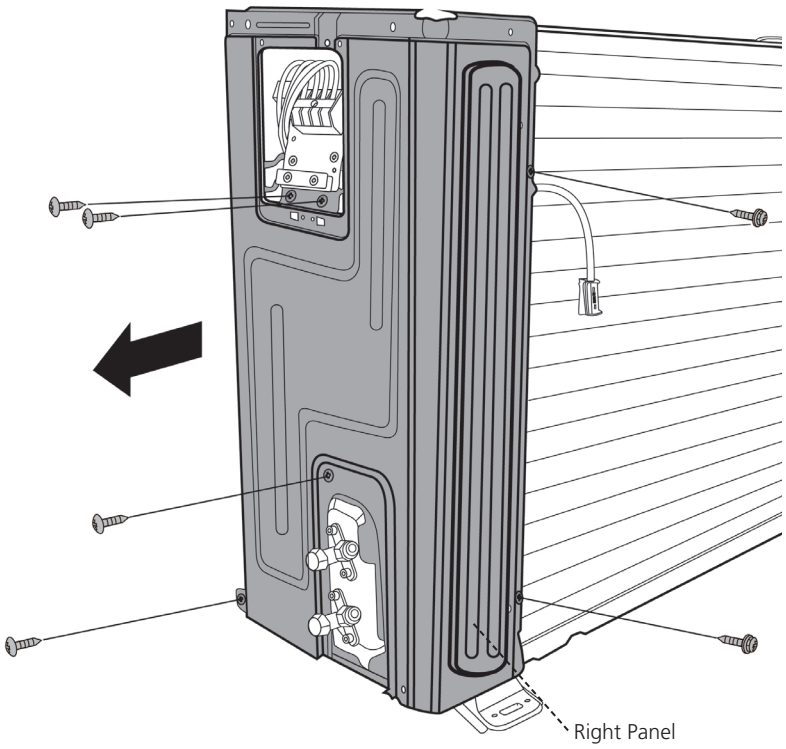 **CJ_X430_005** |

**Note: This section is for reference only. Actual unit appearance may vary.**

## 3.2 Electrical parts

**WARNING:** Antistatic gloves must be worn when you disassemble the electronic box.

**Note: Remove the air outlet grille(refer to 3.1 Panel Plate) before disassembling electrical parts.**

### 1. PCB board 1

| Procedure | Illustration |
|---|---|
| 1) Remove the screws of the top cover. (2 screws) (see CJ_ODU_PCB_001-1). | 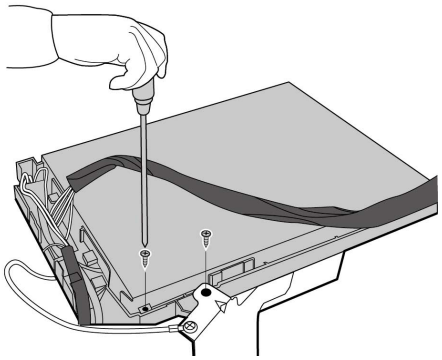 CJ_ODU_PCB_001-1 |
| 2) Unfix the hooks and then open the electronic control box cover (4 hooks) (see CJ_ODU_PCB_001-2). | 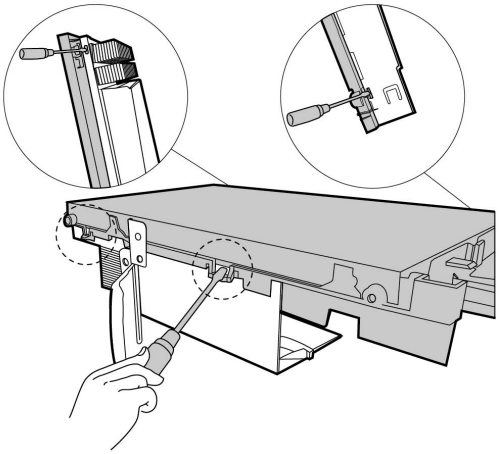 CJ_ODU_PCB_001-2 |
| 3) Disconnect the connector for fan motor from the electronic control board (see CJ_ODU_PCB_001-3).<br>4) Remove the connector for the compressor (see CJ_ODU_PCB_001-3).<br>5) Pull out the two blue wires connected with the four way valve (CJ_ODU_PCB_001-3).<br>6) Pull out connectors of the condenser coil temp. sensor(T3),outdoor ambient temp. sensor(T4) and discharge temp. sensor(TP) (CJ_ODU_PCB_001-3).<br>7) Disconnect the electronic expansion valve wire (CJ_ODU_PCB_001-3).<br>8) Then remove the electronic control board. | 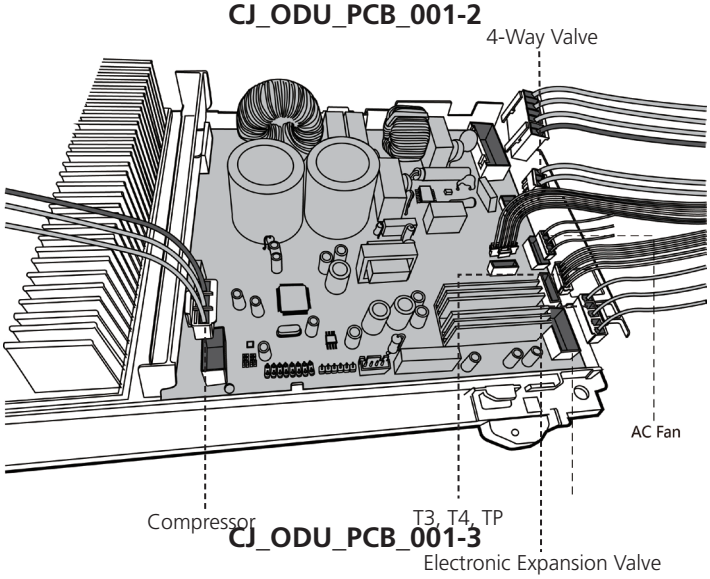 CJ_ODU_PCB_001-3 |

**Note: This section is for reference only. Actual unit appearance may vary.**

## 2. PCB board 2

| Procedure | Illustration |
|---|---|
| 1) Unfix the hooks and then open the electronic control box cover (4 hooks) (see CJ_ODU_PCB_002-1). | 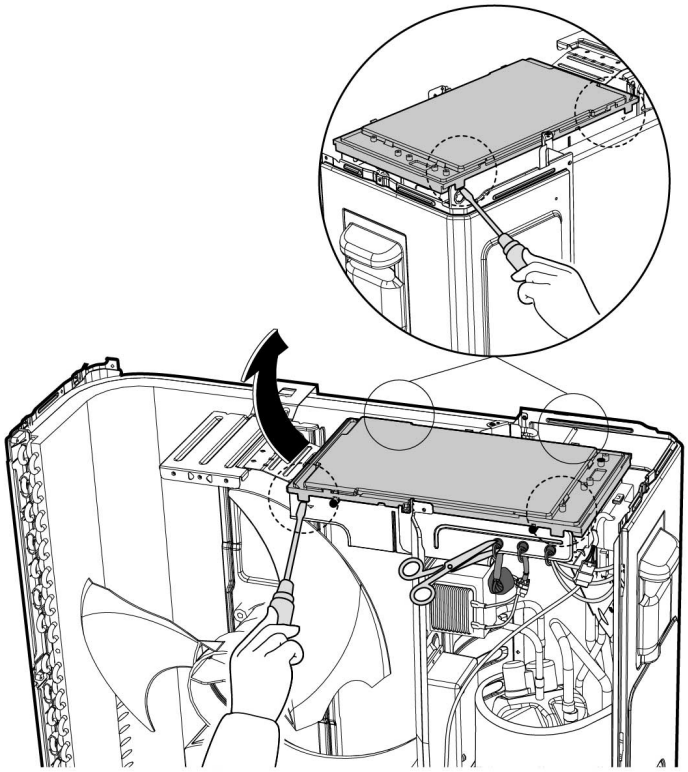 CJ_ODU_PCB_002-1 |
| 2) Disconnect the connector for fan motor from the electronic control board (see CJ_ODU_PCB_002-2).<br>3) Remove the connector for the compressor (see CJ_ODU_PCB_002-2).<br>4) Pull out the two blue wires connected with the four way valve (see CJ_ODU_PCB_002-2).<br>5) Pull out connectors of the condenser coil temp. sensor(T3),outdoor ambient temp. sensor(T4) and discharge temp. sensor(TP) (see CJ_ODU_PCB_002-2).<br>6) Disconnect the electronic expansion valve wire (see Fig CJ_ODU_PCB_002-2).<br>7) Then remove the electronic control board. | 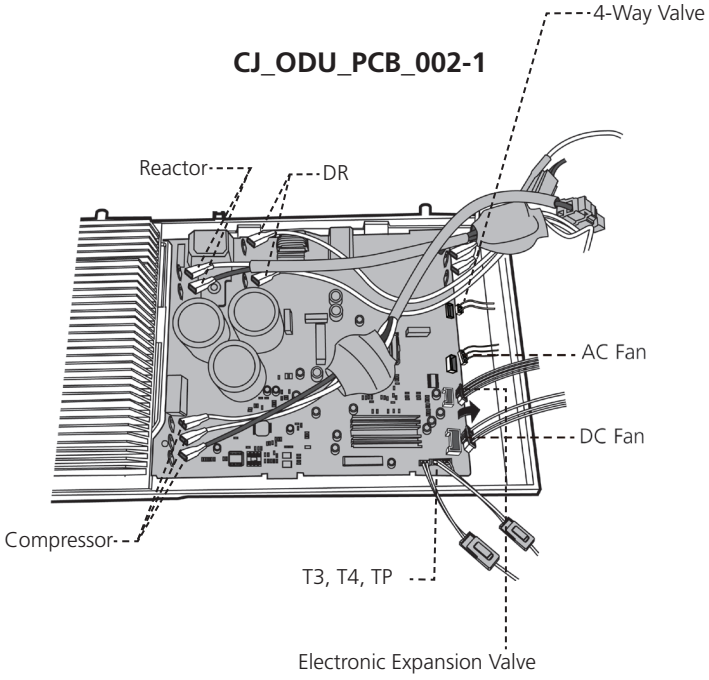 CJ_ODU_PCB_002-2 |

**Note: This section is for reference only. Actual unit appearance may vary.**

### 3. PCB board 3

| Procedure | Illustration |
| --- | --- |
| 1) Remove the 5 screws and unfix two hooks, then remove the electronic control box subassembly.(see CJ_ ODU_PCB_003-1).<br>Note:Electric control box cover cannot be removed, so the voltage between P and N cannot be measured. | 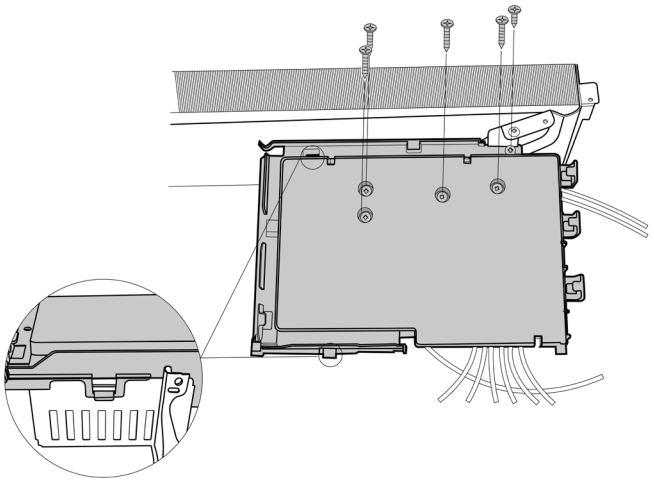<br>**CJ_ODU_PCB_003-1** |

**Note: This section is for reference only. Actual unit appearance may vary.**

## 4. PCB board 4

| Procedure | Illustration |
|---|---|
| 1) Remove the screws of the top cover. (1 screws) (see CJ_ODU_PCB_004-1). | 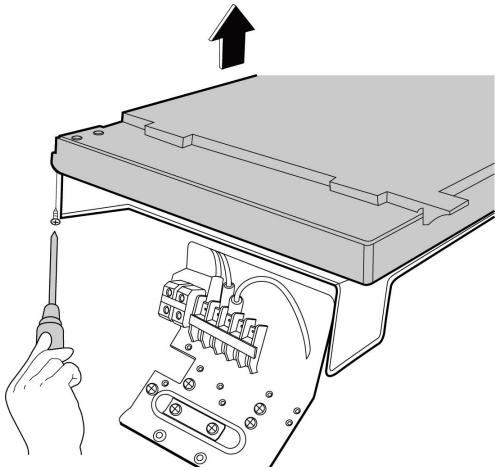 CJ_ODU_PCB_004-1 |
| 2) Unfix the hooks and then open the electronic control box cover (5 hooks) (see CJ_ODU_PCB_004-2). | 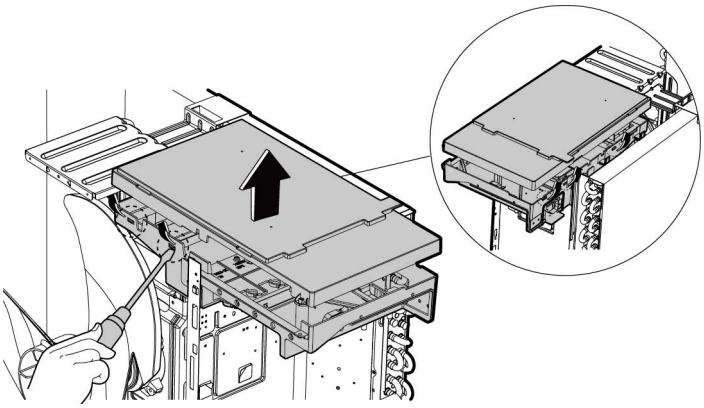 CJ_ODU_PCB_004-2 |
| 3) Disconnect the connector for fan motor from the IPM board (see CJ_ODU_PCB_004-3).<br>4) Remove the connector for the compressor (see CJ_ODU_PCB_004-3). | 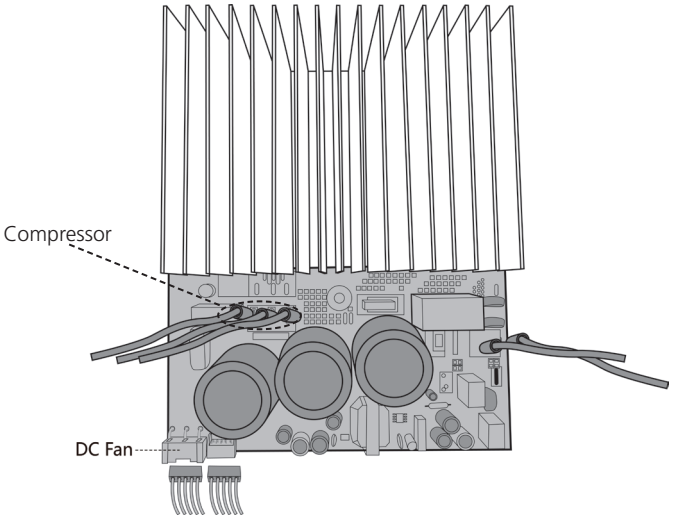 CJ_ODU_PCB_004-3 |

**Note: This section is for reference only. Actual unit appearance may vary.**

| Procedure | Illustration |
| --- | --- |
| 5) Pull out the wire connected with the terminal. (see CJ_ODU_PCB_004-4).<br>6) Pull out connectors of the condenser coil temp. sensor(T3),outdoor ambient temp. sensor(T4) and discharge temp. sensor(TP) (see CJ_ODU_PCB_004-4).<br>7) Disconnect the electronic expansion valve wire (see Fig CJ_ODU_PCB_004-4).<br>8) Remove the connector for 4-way valve. (see Fig CJ_ODU_PCB_004-4).<br>9) Remove the connector for the reactor (see Fig CJ_ODU_PCB_004-4).<br>10)Then remove the electronic control box (see Fig CJ_ODU_PCB_004-4). | 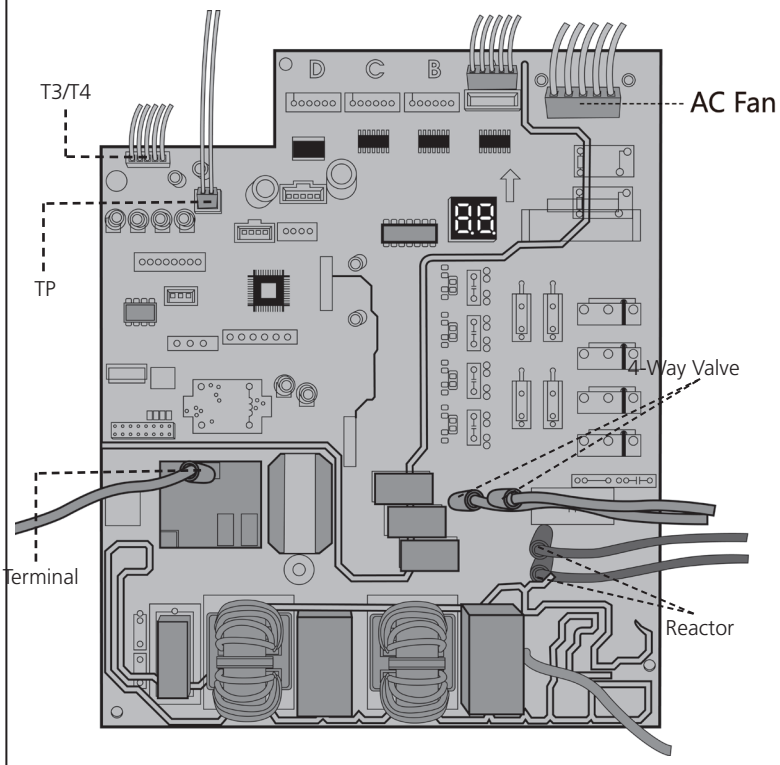<br>**CJ_ODU_PCB_004-4** |

**Note: This section is for reference only. Actual unit appearance may vary.**

## 5. PCB board 5

| Procedure | Illustration |
|---|---|
| 1) Unfix the hooks and then open the electronic control box cover (4 hooks) (see CJ_ODU_PCB_005-1).<br>2) Disconnect the connector for outdoor DC fan from the electronic control board (see CJ_ODU_PCB_005-2).<br>3) Remove the connector for the compressor (see CJ_ODU_PCB_005-2).<br>4) Pull out the two blue wires connected with the four way valve (see CJ_ODU_PCB_005-2).<br>5) Pull out connectors of the condenser coil temp. sensor(T3),outdoor ambient temp. sensor(T4) and discharge temp. sensor(TP) (see CJ_ODU_PCB_005-2).<br>6) Disconnect the electronic expansion valve wire (see Fig CJ_ODU_PCB_005-2).<br>7) Disconnect the communication wire indoor PCB (see Fig CJ_ODU_PCB_005-2).<br>8) Disconnect the PFC inductor (see Fig CJ_ODU_PCB_005-2).<br>9) Then remove the electronic control box (see CJ_ODU_PCB_005-2). | 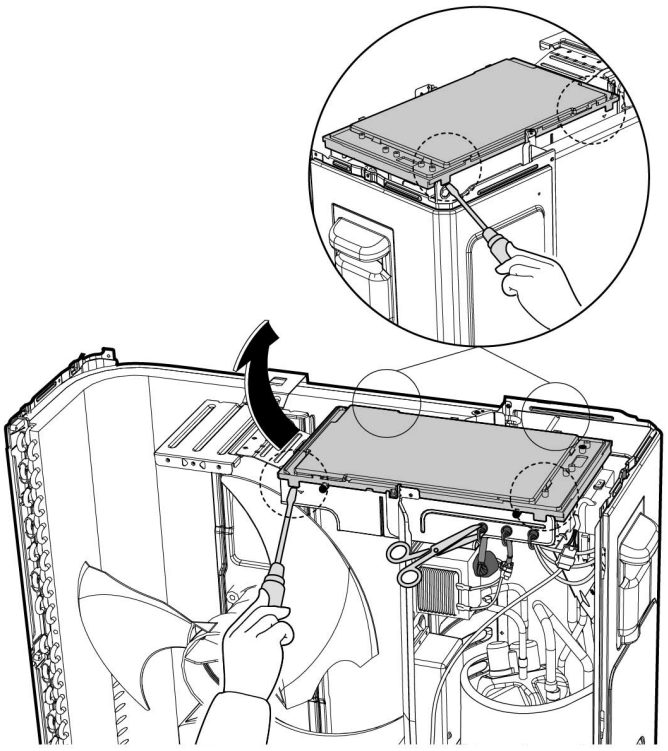<br>**CJ_ODU_PCB_005-1**<br>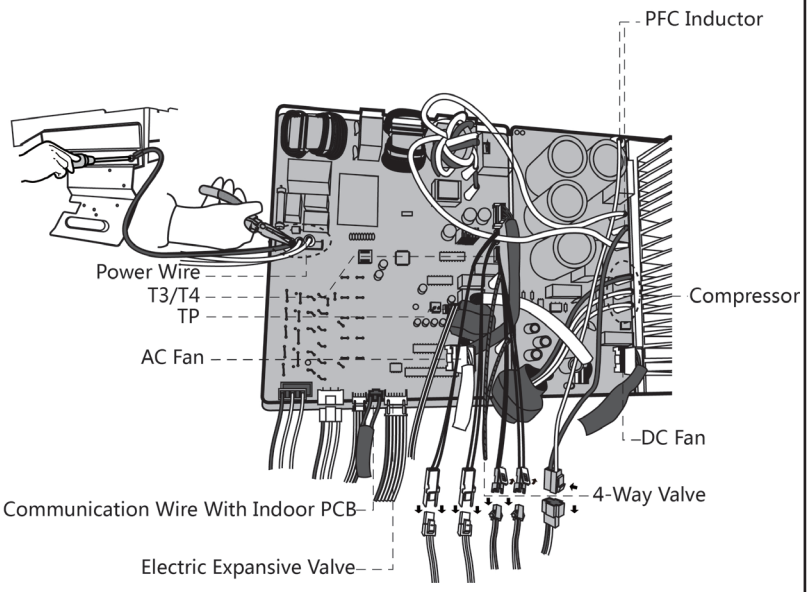<br>**CJ_ODU_PCB_005-2** |

**Note: This section is for reference only. Actual unit appearance may vary.**

## 6. PCB board 6

| Procedure | Illustration |
|---|---|
| 1) Disconnect the connector for compressor and release the ground wire(1 screw,for some models ). (see CJ_ODU_PCB_006-1). | 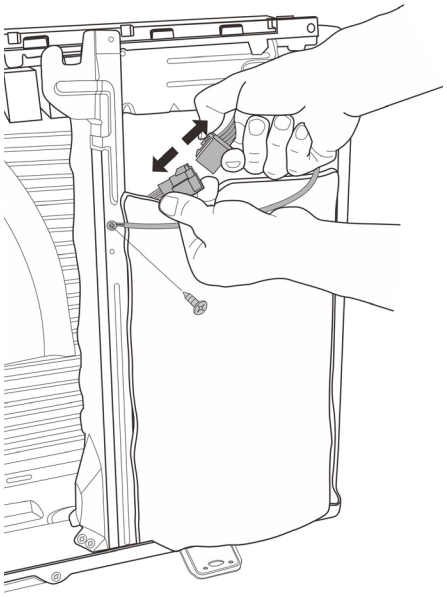 CJ_ODU_PCB_006-1 |
| 2) Remove the electronic control box subassembly. (see CJ_ODU_ PCB_006-2).<br>Note:Electric control box cover cannot be removed, so the voltage between P and N cannot be measured. | 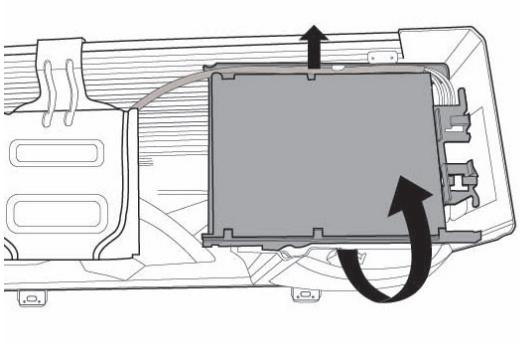 CJ_ODU_PCB_006-2 |

**Note: This section is for reference only. Actual unit appearance may vary.**

## 7. PCB board 7

| Procedure | Illustration |
|---|---|
| 1) Unfix the hooks and then open the cover (4 hooks)(see CJ_ODU_PCB_007-1). | 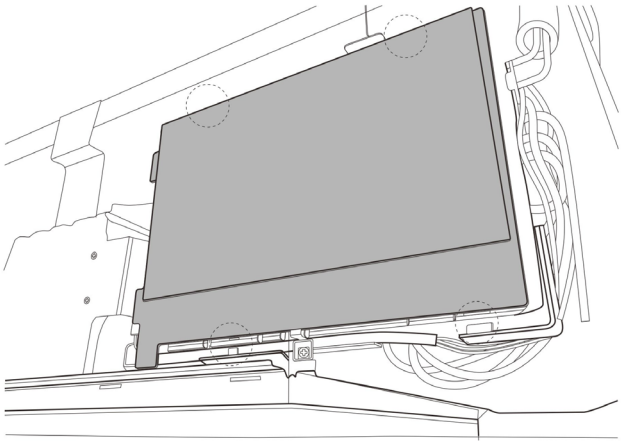 CJ_ODU_PCB_007-1 |
| 2) Remove 4 screws on the electronic control board and then remove the electronic control box subassembly. (see CJ_ODU_PCB_007-2).<br>Note:Electronic installing box cannot be opened, so the voltage between P and N cannot be measured. | 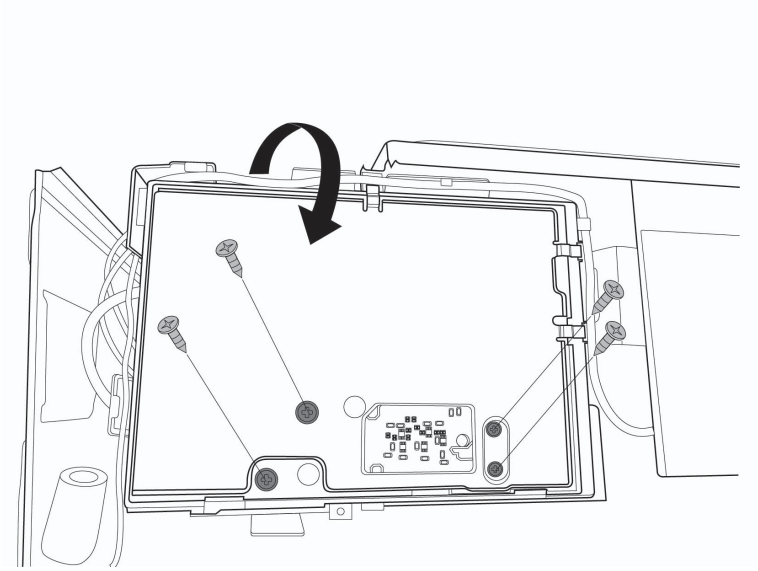 CJ_ODU_PCB_007-2 |

**Note: This section is for reference only. Actual unit appearance may vary.**

| Procedure | Illustration |
| --- | --- |
| 3) Remove two screws and then remove the electronic control box subassembly on partition board assembly. (see CJ_ODU_PCB_007-3). | 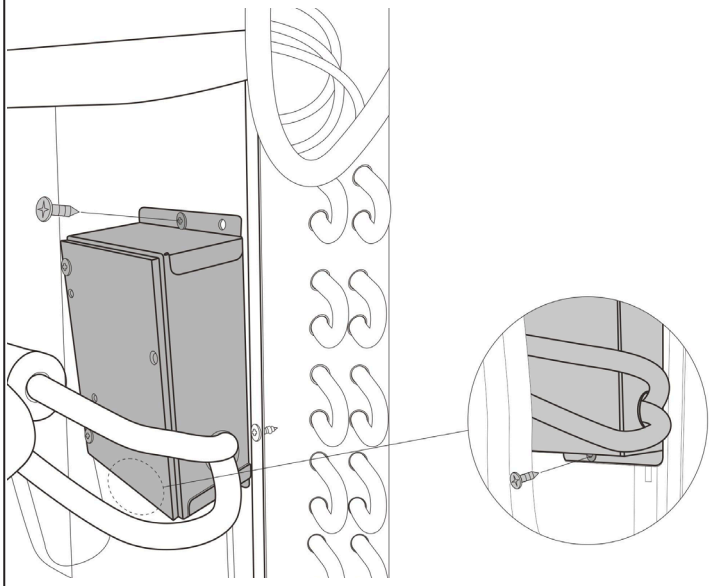 CJ_ODU_PCB_007-3 |

**Note: This section is for reference only. Actual unit appearance may vary.**

| Procedure | Illustration |
| --- | --- |
| 6) Remove two screws and two connectors and then remove the inverter control board (see CJ_ODU_PCB_007-4). | 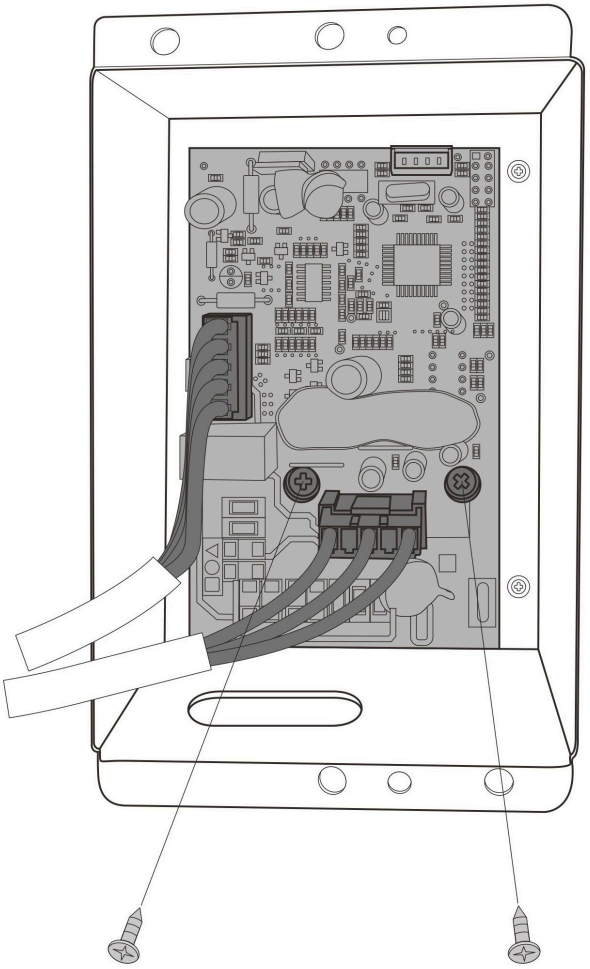 CJ_ODU_PCB_007-4 |

**Note: This section is for reference only. Actual unit appearance may vary.**

## 8. PCB board 8

| Procedure | Illustration |
| --- | --- |
| 1) Disconnect the connector for compressor and release the ground wire(1 screw). (see CJ_ODU_PCB_0011-1). | 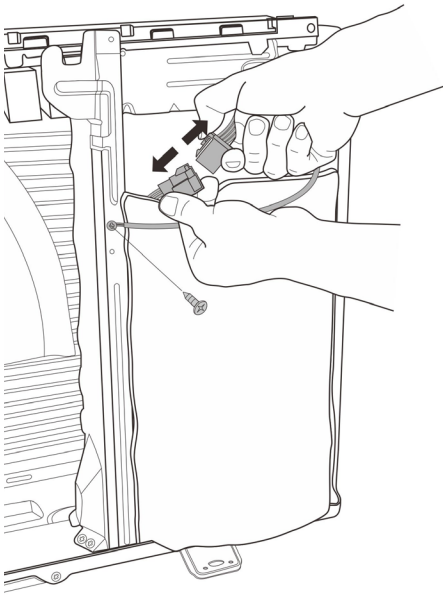 |
| 2) Remove the electronic control box subassembly. (see CJ_ODU_PCB_008-2). | **CJ_ODU_PCB_008-1** |
| Note:Electric control box cover cannot be removed, so the voltage between P and N cannot be measured. | 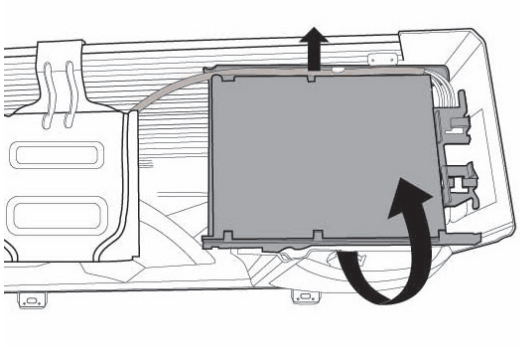 |
| | **CJ_ODU_PCB_008-2** |

**Note: This section is for reference only. Actual unit appearance may vary.**

## 9. PCB board 9

| Procedure | Illustration |
|---|---|
| 1) Unfix the hooks and then open the cover (4 hooks)(see CJ_ODU_PCB_009-1). | 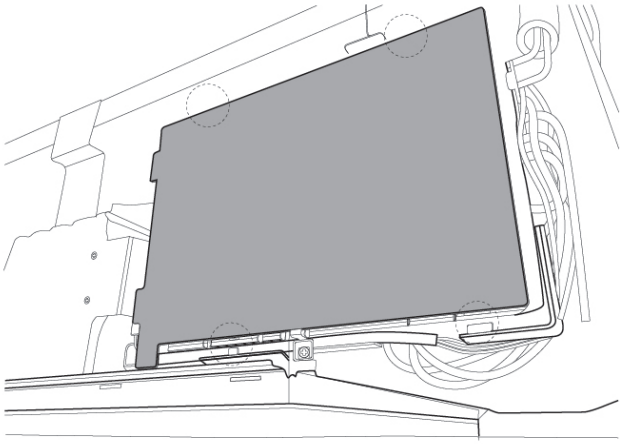 CJ_ODU_PCB_009-1 |
| 2) Remove 6 screws on the electronic control board and then remove the electronic control box subassembly. (see CJ_ODU_PCB_009-2).<br>Note:Electronic installing box cannot be opened, so the voltage between P and N cannot be measured. | 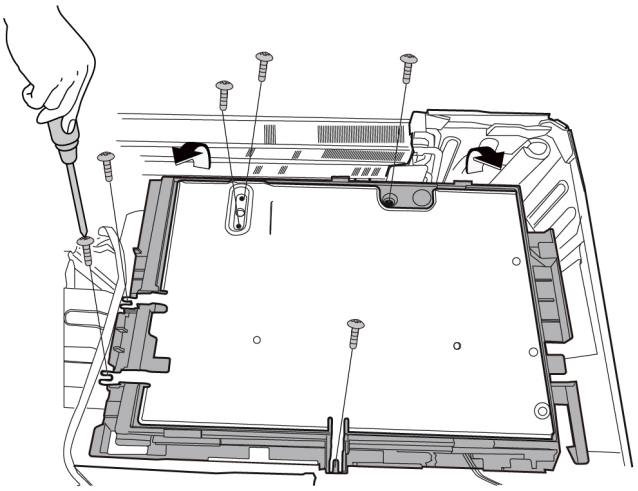 CJ_ODU_PCB_009-2 |

**Note: This section is for reference only. Actual unit appearance may vary.**

| Procedure | Illustration |
| --- | --- |
| 3) Pull out the connector, remove one screw and then remove the key board subassembly on terminal board. (see CJ_ODU_PCB_009-3) (for some models). | 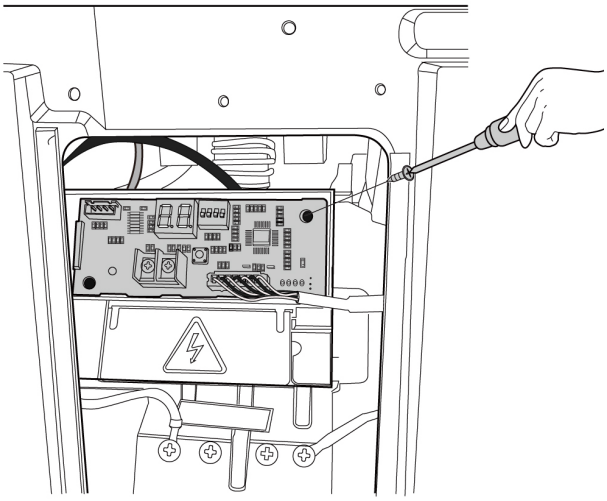 CJ_ODU_PCB_009-3 |

**Note: This section is for reference only. Actual unit appearance may vary.**

## 10. PCB board 10

| Procedure | Illustration |
|---|---|
| 1) Disconnect the connector for compressor. (see CJ_ODU_PCB_010-1).<br>2) Remove the screws of cover of electronic control box(5 screws). (see CJ_ODU_PCB_010-1).<br>3) Turn over the electronic control box subassembly | 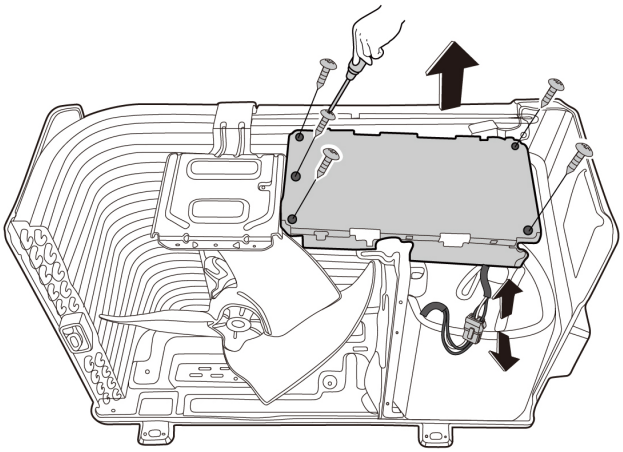<br>**CJ_ODU_PCB_010-1** |
| 4) Disconnect the connectors from the electronic control board (see CJ_ODU_PCB_010-2).<br>5) Then remove the electronic control board.(see CJ_ODU_PCB_010-2). | 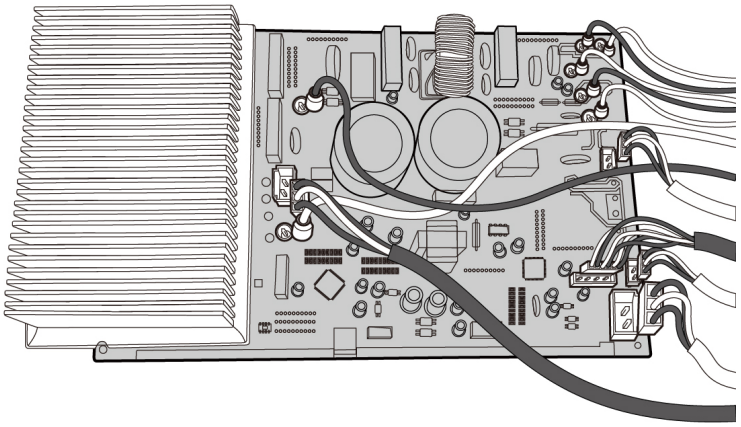<br>**CJ_ODU_PCB_010-2** |

**Note: This section is for reference only. Actual unit appearance may vary.**

## 11. PCB board 11

| Procedure | Illustration |
|---|---|
| 1) Disconnect the connector for compressor and release the ground wire(1 screw). (see CJ_ODU_PCB_011-1). | 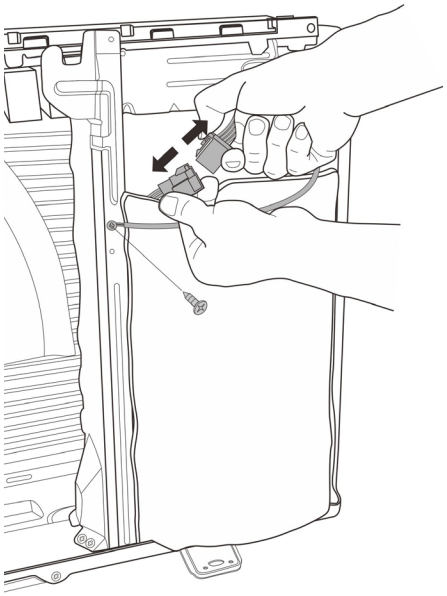 CJ_ODU_PCB_011-1 |
| 2) Remove the electronic control box subassembly. (see CJ_ODU_PCB_011-2).<br>Note:Electric control box cover cannot be removed, so the voltage between P and N cannot be measured. | 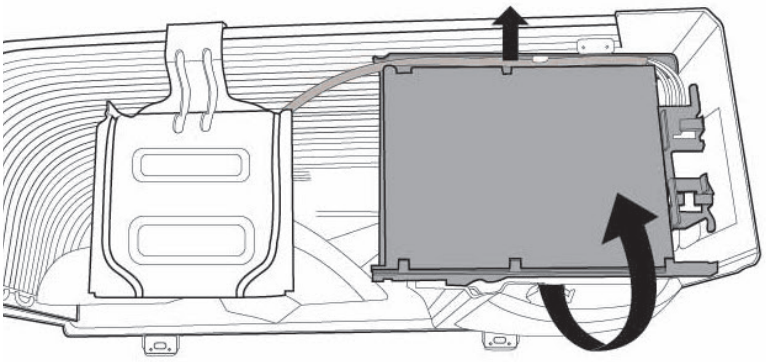 CJ_ODU_PCB_011-2 |

**Note: This section is for reference only. Actual unit appearance may vary.**

## 3.3 Fan Assembly

**Note: Remove the panel plate (refer to 3.1 Panel Plate) before disassembling fan.**

| Procedure | Illustration |
|---|---|
| 1) Remove the nut securing the fan with a spanner (see CJ_ODU_FAN_001).<br>2) Remove the fan. | 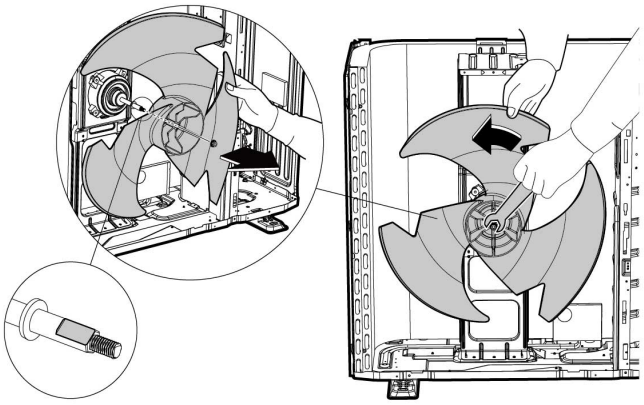 |

**CJ_ODU_FAN_001**

**Note: This section is for reference only. Actual unit appearance may vary.**

## 3.4 Fan Motor

**Note: Remove the panel plate and the connection of fan motor on PCB (refer to 3.1 Panel Plate and 3.2 Electrical parts) before disassembling fan motor.**

| Procedure | Illustration |
|---|---|
| 3) Remove the fixing screws of the fan motor (4 screws) (see CJ_ODU_MOTOR_001).<br>4) Remove the fan motor. | 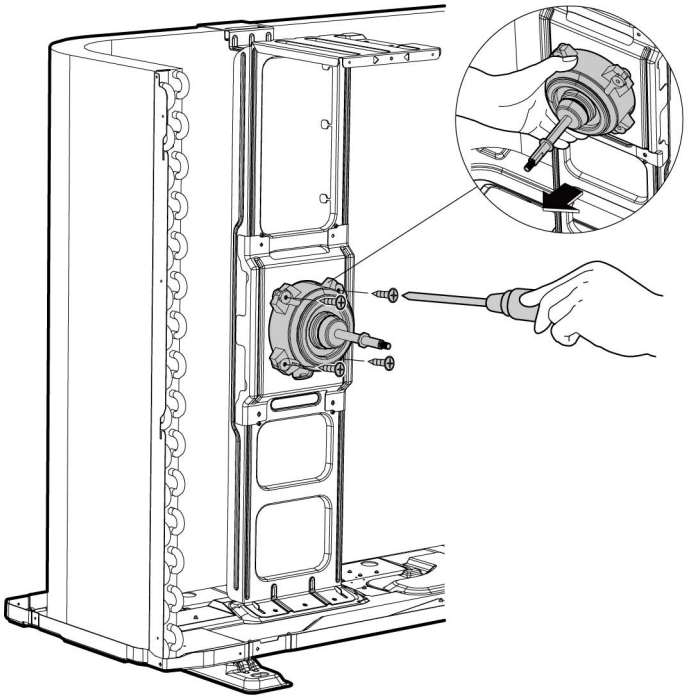<br>**CJ_ODU_MOTOR_001** |

**Note: This section is for reference only. Actual unit appearance may vary.**

## 3.5 Sound blanket

**Note: Remove the panel plate (refer to 3.1 Panel plate) before disassembling sound blanket.**

| Procedure | Illustration |
|---|---|
| 1) Remove the sound blanket (side and top) (see CJ_ODU_BLANKET_001). | 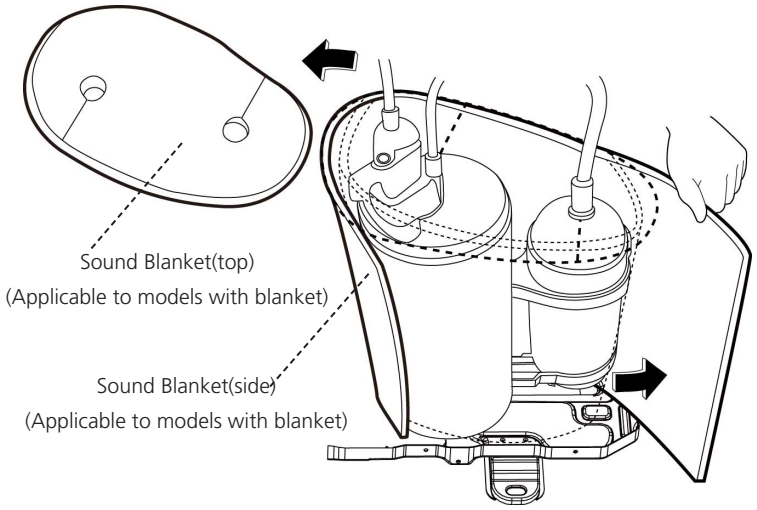 **CJ_ODU_BLANKET_001** |

**Note: This section is for reference only. Actual unit appearance may vary.**

## 3.6 Four-way valve (for heat pump models)

**WARNING:** Evacuate the system and confirm that there is no refrigerant left in the system before removing the four-way valve and the compressor. (For R32 & R290, you should evacuate the system with the vacuum pump; flush the system with nitrogen; then repeat the two steps before heating up the brazed parts. The operations above should be implemented by professionals.)

**Note: Remove the panel plate, connection of four-way valve on PCB (refer to 3.1 Panel plate and 3.2 Electrical parts) before disassembling sound blanket.**

| Procedure | Illustration |
|---|---|
| 1) Heat up the brazed parts and then detach the the four-way valve and the pipe (see CJ_ODU_VALVE_001).<br>2) Remove the four-way valve assembly with pliers. | 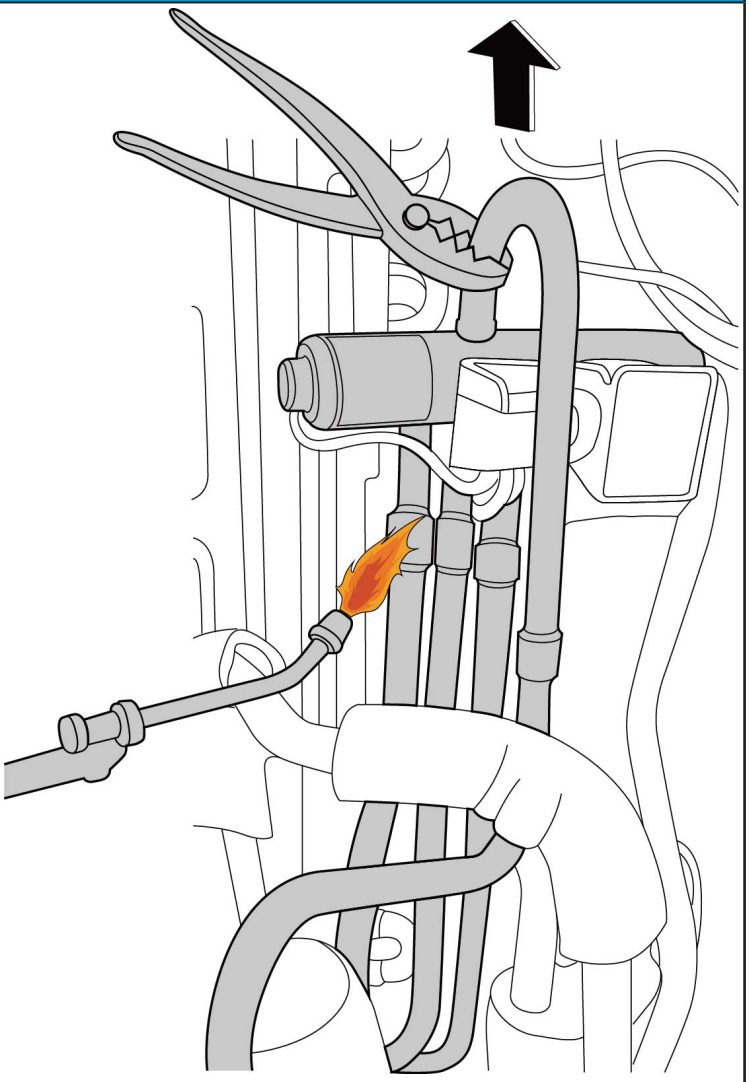 |

**CJ_ODU_VALVE_001**

**Note: This section is for reference only. Actual unit appearance may vary.**

## 3.7 Compressor

**WARNING:** Evacuate the system and confirm that there is no refrigerant left in the system before removing the four-way valve and the compressor. (For R32 & R290, you should evacuate the system with the vacuum pump; flush the system with nitrogen; then repeat the two steps before heating up the brazed parts. The operations above should be implemented by professionals.)

**Note: Remove the panel plate, connection of compressor on PCB (refer to 3.1 Panel plate and 3.2 Electrical parts) before disassembling sound blanket.**

| Procedure | Illustration |
|---|---|
| 1) Remove the flange nut of terminal cover and remove the terminal cover (see CJ_ ODU_COMP_001). | 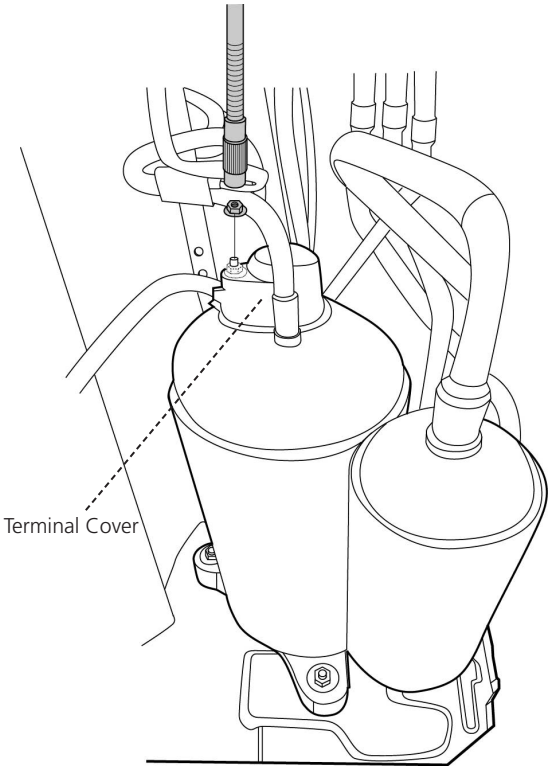 CJ_ODU_COMP_001 |
| 2) Disconnect the connectors (see CJ_ODU_ COMP_002). | 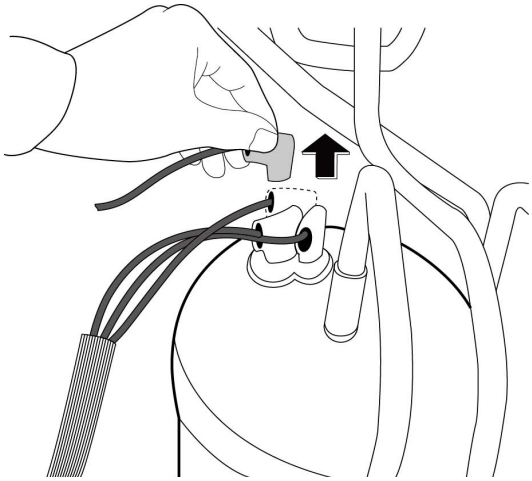 CJ_ODU_COMP_002 |

**Note: This section is for reference only. Actual unit appearance may vary.**

| Procedure | Illustration |
| --- | --- |
| 3) Remove the hex nuts and washers securing the compressor, located on the bottom plate (see CJ_ODU_COMP_003). | 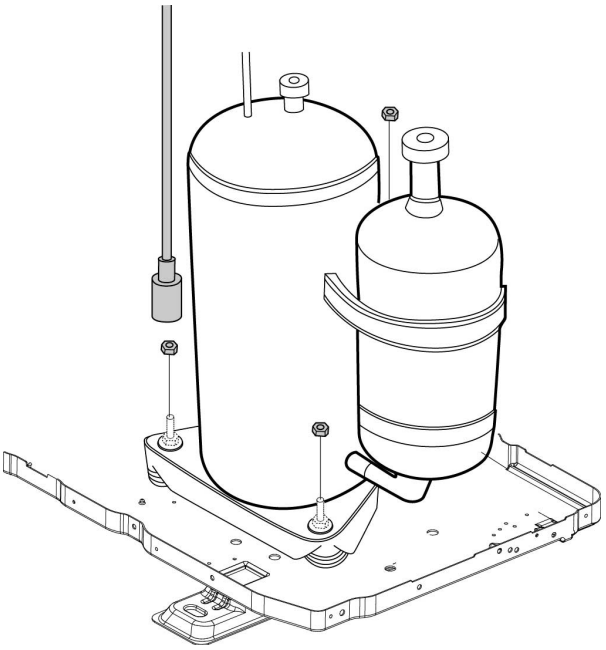 CJ_ODU_COMP_003 |
| 4) Heat up the brazed parts and then remove the the discharge pipe and the suction pipe (see CJ_ODU_COMP_004).<br>5) Lift the compressor from the base pan assembly with pliers. | 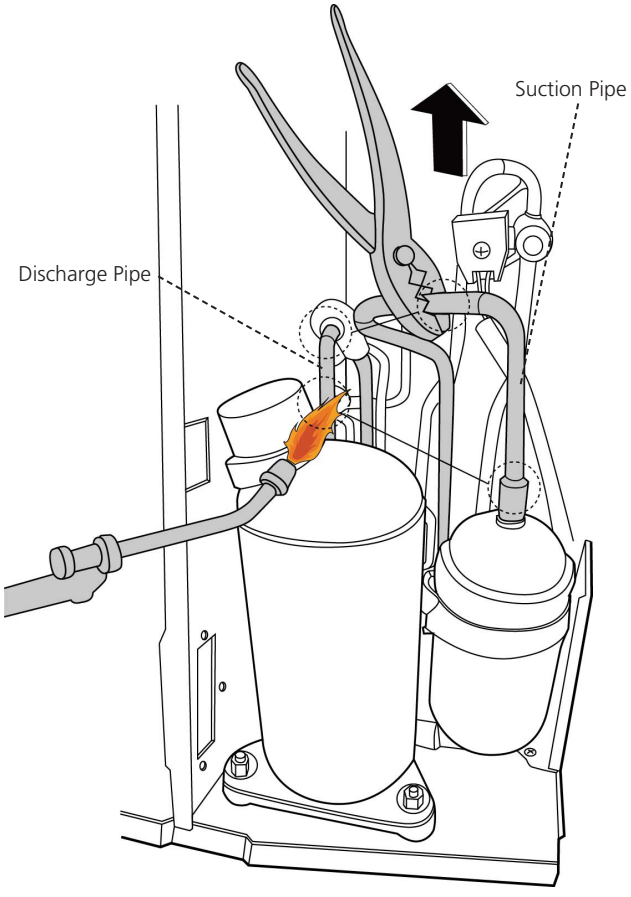  CJ_ODU_COMP_004 |

**Note: This section is for reference only. Actual unit appearance may vary.**

# Troubleshooting

## Contents


**1. Safety Caution .....3**

**2. General Troubleshooting .....4**

**3. Complain Record Form .....6**

**4. Information Inquiry .....8**

**5. Error Diagnosis and Troubleshooting Without Error Code.....13**

5.1 Remote maintenance.....13

5.2 Field maintenance .....14

**6. Quick Maintenance by Error Code.....19**

**7. Troubleshooting by Error Code.....19**

TS01 EEPROM Parameter Error Diagnosis and Solution

TS02 Indoor and Outdoor Unit Communication Error Diagnosis and Solution

TS03 Zero-crossing Signal Detection Error Diagnosis and Solution

TS04 Fan Speed is Operating Outside of The Normal Range Diagnosis and Solution

TS05 Open Circuit or Short Circuit of Temperature Sensor Diagnosis and Solution

TS06 Refrigerant Leakage Detection Diagnosis and Solution

TS07 Indoor PCB/Display Board Communication Error Diagnosis and Solution

TS08 Current Overload Protection Diagnosis and Solution

TS09 IPM Malfunction or IGBT Over-strong Current Protection Diagnosis and Solution

# Troubleshooting

## Contents


TS10 Over Voltage or Too Low Voltage Protection Diagnosis and Solution

TS11 Top temperature Protection of Compressor or High Temperature Protection of IPM Module or High Pressure Protection Diagnosis and Solution

TS12 Inverter Compressor Drive Error Diagnosis and Solution

TS26 High pressure protection or Low pressure protection Diagnosis and Solution

TS14 Indoor units mode conflic Diagnosis and Solution

TS33 Communication error between outdoor main chip and compressor driven chip Diagnosis and Solution

TS34 AP mode is active but there is no WIFI kit installed Diagnosis and Solution

**8. Check Procedures**

## 1. Safety Caution

**WARNING**

**Be sure to turn off all power supplies or disconnect all wires to avoid electric shock. While checking indoor/outdoor PCB, please equip oneself with antistatic gloves or wrist strap to avoid damage to the board.**

**WARNING**

**Electricity remains in capacitors even when the power supply is off. Ensure the capacitors are fully discharged before troubleshooting.**

Test the voltage between P and N on back of the main PCB with multimeter. If the voltage is lower than 36V, the capacitors are fully discharged. For models that cannot be measured, wait 5 minutes after the power supply is off to ensure that the capacitors are fully discharged.

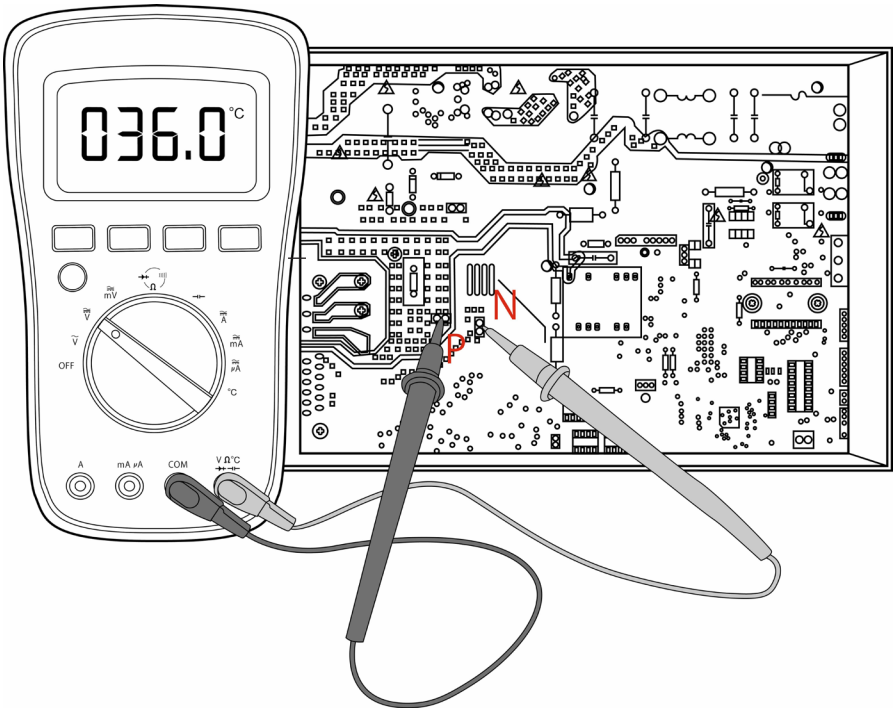


**Note: This picture is for reference only. Actual appearance may vary.**

# 2. General Troubleshooting

## 2.1 Error Display (Indoor Unit)

When the indoor unit encounters a recognized error on different models ,
1. the running LED with flash in a corresponding series, the timer LED may turn on or begin flashing;
2. an error code will be displayed;
3. both 1 and 2.

These error codes are described in the following tables:

| Running Lamp | Timer Lamp | Display | Information | Solution |
|---|---|---|---|---|
| -- | -- | dF | Defrost | Normal Display, not error code |
| -- | -- | CL | Filter cleaning reminder(power on display for 15 seconds) | |
| -- | -- | CL | Active clean | |
| -- | -- | nF | Filter replacement reminder(power on display for 15 seconds)(for some models) | |
| -- | -- | FP | Heating in room temperature under 8°C | |
| -- | -- | FC | Forced cooling | |
| -- | -- | AP | AP mode of WIFI connection | |
| -- | -- | CP | Remote switched off | |
| 1 time | OFF | EH00/EH0A | Indoor unit EEPROM parameter error | TS01-IDU |
| 2 times | OFF | EL01 | Indoor/outdoor unit communication error | TS02-S-INV |
| 3 times | OFF | EH02 | Zero-crossing signal detection error | TS03 |
| 4 times | OFF | EH03 | The indoor fan speed is operating outside of the normal range | TS04-S-IDU |
| 5 times | OFF | EC51 | Outdoor unit EEPROM parameter error | TS01-ODU |
| 5 times | OFF | EC52 | Condenser coil temperature sensor T3 is in open circuit or has short circuited | TS05-ODU |
| 5 times | OFF | EC53 | Outdoor room temperature sensor T4 is in open circuit or has short circuited | TS05-ODU |
| 5 times | OFF | EC54 | Compressor discharge temperature sensor TP is in open circuit or has short circuited | TS05-ODU |
| 5 times | OFF | EC56 | Evaporator coil outlet temperature sensor T2B is in open circuit or has short circuited(for free-match indoor units) | TS05-ODU |
| 6 times | OFF | EH60 | Indoor room temperature sensor T1 is in open circuit or has short circuited | TS05-IDU |
| 6 times | OFF | EH61 | Evaporator coil middle temperature sensor T2 is in open circuit or has short circuited | TS05-IDU |
| 12 times | OFF | EC07 | The outdoor fan speed is operating outside of the normal range | TS04-ODU |
| 9 times | OFF | EH0b | Indoor PCB/Display board communication error | TS07 |
| 8 times | OFF | EL0C | Refrigerant leakage detection | TS06-INV |
| 7 times | FLASH | PC00 | IPM malfunction or IGBT over-strong current protection | TS09-S |
| 2 times | FLASH | PC01 | Over voltage or over low voltage protection | TS10-S |

| | | | | |
|---|---|---|---|---|
| 3 times | FLASH | PC02 | Top temperature protection of compressor or High temperature protection of IPM module or High pressure protection | TS11-S-INV |
| 5 times | FLASH | PC04 | Inverter compressor drive error | TS12-S |
| 1 time | FLASH | PC08 | Current overload protection | TS08-S |
| 6 times | FLASH | PC40 | Communication error between outdoor main chip and compressor driven chip | TS33 |
| 7 times | FLASH | PC03 | High pressure protection or low pressure protection | TS26-INV |
| - | - | FHOP | AP mode is active but there is no WIFI kit installed | TS34 |
| 1 times | ON | -- | Indoor units mode conflict(match with multi outdoor unit) | TS14 |

**For other errors:**

The display board may show a garbled code or a code undefined by the service manual. Ensure that this code is not a temperature reading.

**Troubleshooting:**

Test the unit using the remote control. If the unit does not respond to the remote, the indoor PCB requires replacement. If the unit responds, the display board requires replacement.

**88 flash frequency:**

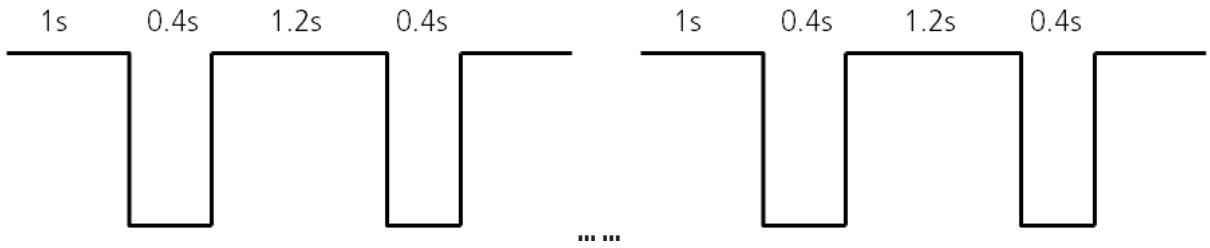

## 3. Complain Record Form

### Complain Record Form

Request No.: Date:

Installation Date: Service Date:

| Customer Information | | | |
|---|---|---|---|
| Name | | Telephone No. | |
| Home Address | | | |
| Email | | | |
| | | | |
| **Product Information** | | | |
| Indoor Unit Model | | Outdoor Unit Model | |
| Serial No. of indoor unit | | | |
| Serial No. of outdoor unit | | | |
| Working Mode | ☐Cooling ☐Heating ☐Fan only ☐Dry | | |
| Setting temperature | _____°C / °F | Fan speed | ☐Turbo ☐High ☐Medium ☐Low ☐Auto |
| Temperature of air inlet | _____°C / °F | Temperature of air outlet | _____°C / °F |
| | | | |
| **Installation / Condition Information** | | | |
| Indoor temperature | _____°C / °F | Indoor humidity | _____%RH |
| Outdoor temperature | _____°C / °F | Outdoor humidity | _____%RH |
| Length of Connecting pipe | | Pipe diameter | Gas pipe: Liquid pipe: |
| Length of Wiring | | wire diameter | |
| System Running Pressure | _____MPa or _____Bar or _____PSI | | |
| Room size (L*W*H) | | | |
| Photo of Installation of Indoor unit (Photo #1) | | Photo of Installation of Outdoor unit (Photo #2) | |
| | | | |
| **Failure Description** | | | |
| Error Code of Indoor unit | | Code of Outdoor PCB | |
| Unit does not start | | | |
| Remote control does not work | | | |
| Indoor display shows nothing | | | |
| No cooling or heating at all | | | |
| Less cooling or heating | | | |
| Unit starts but stops shortly | | | |
| High noise | | | |
| High vibration | | | |
| | | | |

| Parameter Checking information by Remote controller | | | |
|---|---|---|---|
| Displaying code | Displaying code meaning | Display value | Display value meaning |
| T1 | Room temperature | | |
| T2 | Indoor coil temperature | | |
| T3 | Outdoor coil temperature | | |
| T4 | Ambient temperature | | |
| TP | Discharge temperature | | |
| FT | Targeted Frequency | | |
| Fr | Actual Frequency | | |
| dL | Compressor current | | |
| Uo | Outdoor AC voltage | | |
| Sn | Indoor capacity test | / | N/A |
| -- | Reserve | / | N/A |
| Pr | Outdoor fan speed | | |
| Lr | EXV opening steps | | |
| ir | Indoor fan speed | | |
| HU | Indoor humidity | | |
| TT | Adjusted setting temperature | | |
| DT | Reserve | / | N/A |
| iF | Reserve | / | N/A |
| nA | Reserve | / | N/A |
| oT | GA algorithm frequency | | |

| Approval from Manufacturer | |
|---|---|
| ☐Approved | |
| ☐More Proof needed | |
| ☐Rejected | |

## 4. Information Inquiry&Setting

- To enter engineer mode, in power-on or standby mode, and in non-locked state, press the key combination “ON/OFF + Air Speed” for 7s:
- After entering the engineer mode, the remote control will display icons of “Auto, Cool, Dry, Heat”, and the Battery icon; at the same time, it will also display the numeric code of the current engineer mode (for the initial engineer mode, the numeric code displayed is 0), and all other icons are inactive.
- In engineer mode, the value of the current numeric code can be adjusted circularly through the Up/Down key, with the setting range of 0 to 30. Each time the current numeric code is adjusted, the special code of the engineer mode will be transmitted with a delay of 0.6s. The code can also be transmitted by pressing “OK”, and the special code of the engineer mode sent contains information of the currently displayed numeric code (if the numeric code is 0, the code to enter the engineer mode will be transmitted).
- In engineer mode, other keys or operations are invalid except for the On/Off key, the Up/Down key, the OK key or executing the operation to exit the engineer mode.

| Code | Query Content | Advanced Function Setting |
|---|---|---|
| 0 | Error code | / |
| 1 | T1 temperature | press "On/Off" for 2s to enter the Power Down Memory Selector, the code displayed is “Ch”, press "OK" to send the Query Power Down Memory Selector code; press the Up/Down key to select 1 or 0 and press “OK” to confirm, 1 indicates that the power down memory exists, and 0 indicates that no power down memory exists; and press "On/Off" for 2s to exit. (Set within 1 minute after power on) |
| 2 | T2 temperature | press "On/Off" for 2s to enter the Internal Fan Control Selector after the pre-set temperature is reaches, the code displayed is “Ch”, press "OK" to send the Query Internal Fan Control Selector code; press the Up/Down key to select 1 to 11: 1 - Stop the fan, 2 - Min. air speed, 3 - Set the air speed, 4 - Termal stop for 4min running for 1min, 5 - Termal stop for 8min running for 1min, 6 - Termal stop for 16min running for 1min, 7 - Termal stop for 24min running for 1min, 8 - Termal stop for 48min running for 1min, 9 - Termal stop for 15min running for 2.5min, 10 - Termal stop for 30min running for 2.5min and 11 - Termal stop for 60min running for 2.5min, press "OK" to confirm, and press "On/Off" for 2s to exit.(Item 5~11 are valid for some models)(Set within 1 minute after power on) |
| 3 | T3 temperature | press "On/Off" for 2s to enter the Mode Selector, press the Up/Down key to select CH (cool and heat, Auto + Cool + Dry + Heat + Fan), HH (Heat only, Heat only + Fan), CC(Cool only, Auto + Cool + Dry + Fa) or nU (Cool and Heat without Auto, Cool + Dry + Heat + Fan), press "OK" to confirm, and the mode selected can be memorized when the remote control is powered down and powered on; and press "On/Off" for 2s to exit. When the remote control does not burn any parameters, the mode setting will not be memorized.(CC or nU is valid for some models)(Set within 1 minute after power on) |
| 4 | T4 temperature | press the "On/Off" for 2s to enter the Min. Set Temperature Selector, press the Up/Down key to select "16°C~24°C", press "OK" to confirm, and the Min. Set Temperature can be memorized when the remote control is powered on and power lost; and press "On/Off" for 2s to exit. When the remote control does not burn any parameters, the min. set temperature will not be memorized.(Set within 1 minute after power on) |

| | | |
|---|---|---|
| 5 | TP temperature | press "On/Off" for 2s to enter the Max. Set Temperature Selector, press the Up/Down key to select "25°C~30°C", press "OK" to confirm, and the Max. Set Temperature can be memorized when the remote control is powered on and power lost; and press "On/Off" for 2s to exit. When the remote control does not burn any parameters, the max. set temperature will not be memorized.(Set within 1 minute after power on) |
| 6 | Compressor Target Frequency FT | press "On/Off" for 2s to enter the Multi-split Cooling and Heating Preference Selector, the code displayed is "Ch", press "OK" to send the Query Multi-split Cooling and Heating Preference Selector code; press the Up/Down key to select H (heating preferred), C (cooling preferred) or A (master settings), press "OK" to confirm; and press "On/Off" for 2s to exit.(Set within 1 minute after power on)(Only multi models are effective) |
| 7 | Compressor Running Frequency Fr | / |
| 8 | | / |
| 9 | Current AC Voltage Uo | / |
| 10 | | / |
| 11 | | press "On/Off" for 2S to enter the Min. Desired Cooling Frequency Selector, the code displayed is Ch, press "OK" to send the Query Min. Desired Cooling Frequency Selector code; press the Up/Down key to select the minimum cooling frequency desired and press "OK" to confirm; press "On/Off" for 2s to exit.(Range:10-50Hz,--;"--" cancels the Settings)(for some models) (Set within 1 minute after power on) |
| 12 | Set Speed Pr of the outdoor fan | press "On/Off" for 2s to enter the Min. Desired Heating Frequency Selector, the code displayed is "Ch", press "OK" to send the Query Min. Desired Heating Frequency Selector code; press the Up/Down key to select the min. desired heating frequency value, press "OK" to confirm; and press the "On/Off" for 2s to exit.(Range:10-50Hz,--;"--" cancels the Settings) (for some models)(Set within 1 minute after power on) |
| 13 | Opening Lr of EEV | press "On/Off" for 2s to enter the Max. Running Frequency Selector of the restricted area 6 in the cooling mode T4, the code displayed is "Ch", press "OK" to send the Query Max. Running Frequency Selector code of the restricted area 6 in the cooling mode T4; press the Up/Down key to select the limit, then press "OK" to confirm; and press "On/Off" for 2s to exit. (Range:20-150Hz,--;"--" cancels the Settings)(for some models) |
| 14 | Actual Running Speed ir of the indoor fan | / |
| 15 | Indoor Humidity Hu | press "On/Off" for 2s to enter the Outdoor Forced Running Frequency Selector, the code displayed is "Ch", press "OK" to send the Query Outdoor Forced Running Frequency Selector code; press the Up/Down key to select the outdoor forced running frequency("10-250Hz"), then press "OK" to confirm; and press "On/Off" for 2s to exit.(Range:10-250Hz,--;"--" cancels the Settings)(for some models) |
| 16 | Set Temperature TT after compensation | press "On/Off" for 2s to enter One-Key Recovery, the code displayed is "rS", then press "OK" to send the One-Key Recovery code, the mode selector of the remote control will recover to "Cooling and heating", the min. temperature recovers to 16°C, and the max. temperature recovers to 30°C; and press "On/Off" for 2s to exit.(for some models) |
| 17 | | nA |

| | | |
|---|---|---|
| 18 | | / |
| 19 | | press "On/Off" for 2s to enter the Cooling Frequency Threshold Settings; press the Up/Down key to select the cooling frequency threshold, press "OK" to confirm; and press the "On/Off" for 2s to exit. (Range:40,41……83,84,--;"--" cancels the Settings)(Set within 1 minute after power on) |
| 20 | Indoor Target Frequency oT | press "ON/OFF" for 2s to enter the Heating Frequency Threshold Settings; press the Up/Down key to select the heating frequency threshold, press "OK" to confirm; and press "On/Off" for 2s to exit.(Range:40,41……83,84,--;"--" cancels the Settings) (Set within 1 minute after power on) |
| 21 | Reserve | press "On/Off" for 2s to enter the Cooling Temperature Compensation Value Settings, the code displayed is "Ch", then press "OK" to send the Query Cooling Temperature Compensation Value code; press the Up/Down key to select the cooling temperature compensation value, then press "OK"; and press "On/Off" for 2s to exit.(Range:-3.0,-2.5,-2.0…2.0,2.5,3.0,3.5,--;"--" cancels the Settings) |
| 22 | | press "On/Off" for 2s to enter the Heating Temperature Compensation Value Settings, the code displayed is "Ch", press "OK" to send the Query Heating Temperature Compensation Value code; press the Up/Down key to select the heating temperature compensation value, then press "OK"; and press "On/Off" for 2s to exit.(Range:-6.5,-6,…1.0,1.5,2.0…6.0,6.5,7.0,7.5,--;"--" cancels the Settings) |
| 23 | | press "On/Off" for 2s to enter the Max. Cooling Air Speed Settings, the code displayed is "Ch", press "OK" to send the Query Max. Cooling Air Speed code; press the Up/Down key to select the max. cooling air speed, then press "OK"; and press "On/Off" for 2s to exit.(Range: -41,-40,-39…17,18,19,20,--;"--" cancels the Settings) |
| 24 | | press "On/Off" for 2S to enter the Min. Cooling Air Speed Settings, the code displayed is "Ch", press "OK" to send the Query Min. Cooling Air Speed code; press the Up/Down key to select the minimum cooling air speed and press "OK" to confirm; press "On/Off" for 2s to exit.(Range: -41,-40,-39…17,18,19,20,--;"--" cancels the Settings) |
| 25 | | press "On/Off" for 2s to enter the Max. Heating Air Speed Settings, the code displayed is "Ch", press "OK" to send the Query Max. Heating Air Speed code; press the Up/Down key to select the maximum heating air speed and press "OK" to confirm; press "On/Off" for 2s to exit.(Range: -41,-40,-39…17,18,19,20,--;"--" cancels the Settings) |
| 26 | | press "On/Off" for 2s to enter the Min. Heating Air Speed Settings, the code displayed is "Ch", press "OK" to send the Query Min. Heating Air Speed code; press the Up/Down key to select the minimum heating air speed and press "OK" to confirm; press "On/Off" for 2s to exit.(Range: -41,-40,-39…17,18,19,20,--;"--" cancels the Settings) |
| 27 | | / |
| 28 | | |
| 29 | | |
| 30 | | |

- In Channel 1~30 settings of the engineer mode, long press the On/off key to return the previous engineer mode.

Exit of engineer mode:

1)In engineer mode, press the key combination of "On/Off + Air speed" for 2s;

2)The engineer mode will be exited if there are no valid key operations for continuous 60s.

Error code of engineer mode

| Display | Error Information |
|---|---|
| EH00/EH0R | Indoor unit EEPROM parameter error |
| EL01 | Indoor / outdoor unit communication error |
| EH bR | Communication error between indoor unit and indoor external fan module |
| EH30 | Parameters error of indoor external fan |
| EH35 | Phase failure of indoor external fan |
| EH36 | Indoor external fan current sampling bias fault |
| EH37 | Indoor external fan zero speed failure |
| EH38 | Indoor external fan stall failure |
| EH39 | Out of step failure of indoor external fan |
| EH3R | Low voltage protection of indoor external fan DC bus |
| EH3b | Indoor external fan DC bus voltage is too high fault |
| EH3E | Indoor external fan overcurrent fault |
| EH3F | Indoor external fan module protection/hardware overcurrent protection |
| EH03 | The indoor fan speed is operating outside of the normal range |
| EC51 | Outdoor unit EEPROM parameter error |
| EC52 | Condenser coil temperature sensor T3 is in open circuit or has short circuited |
| EC53 | Outdoor room temperature sensor T4 is in open circuit or has short circuited |
| EC54 | Compressor discharge temperature sensor TP is in open circuit or has short circuited |
| EC55 | IGBT  temperature sensor TH is in open circuit or has short circuited |
| EC0d | Outdoor unit malfunction |
| EH60 | Indoor room temperature sensor T1 is in open circuit or has short circuited |
| EH61 | Evaporator coil temperature sensor T2 is in open circuit or has short circuited |
| EC71 | Outdoor external fan overcurrent fault |
| EC75 | Outdoor external fan module protection/hardware overcurrent protection |
| EC72 | Outdoor external fan phase failure |
| EC74 | Outdoor external fan current sampling bias fault |
| EC73 | Zero speed failure of outdoor unit DC fan |
| EC07 | The outdoor fan speed is operating outside of the normal range( |
| EL0C | Refrigerant leak detected |
| EH0E | Water-level alarm malfunction |
| PC00 | IPM malfunction or IGBT over-strong current protection |
| PC10 | Over low voltage protection |
| PC11 | Over voltage protection |
| PC12 | DC voltage protection |
| PC02 | Top temperature protection of compressor or High temperature protection of IPM module |
| PC40 | Communication error between outdoor main chip and compressor driven chip |

| | |
|---|---|
| PC41 | Current Input detection protection |
| PC42 | Compressor start error |
| PC43 | Lack of phase (3 phase) protection |
| PC44 | No speed protection |
| PC45 | 341PWM error |
| PC46 | Compressor speed malfunction |
| PC49 | Compressor over current protection |
| PC06 | Compressor discharge temperature  protection |
| PC08 | Outdoor current protection |
| PH09 | Anti-cold air in heating mode |
| PC0F | PFC module malfunction |
| PC30 | System overpressure protection |
| PC31 | System pressure is too low protection |
| PC03 | Pressure protection |
| PC0L | Outdoor low ambient temperature protection |
| PH90 | Evaporator coil temperature over high protection |
| PH91 | Evaporator coil temperature over low Protection |
| PC0R | Condenser high temperature protection |
| PH0C | Indoor unit humidity sensor failure |
| LH00 | Frequency limit caused by T2 |
| LH30 | Indoor external fan current limit |
| LH31 | Indoor external fan voltage limit |
| LC01 | Frequency limit caused by T3 |
| LC02 | Frequency limit caused by TP |
| LC05 | Frequency limit caused by voltage |
| LC03 | Frequency limit caused by current |
| LC06 | Frequency limit caused by PFC |
| LC30 | Frequency limit caused by high pressure |
| LC31 | Frequency limit caused by low pressure |
| LH07 | Frequency limit caused by remote controller |
| -- | Indoor units mode conflict(match with multi outdoor unit) |

# 5. Error Diagnosis and Troubleshooting Without Error Code

**WARNING**

**Be sure to turn off unit before any maintenance to prevent damage or injury.**

## 5.1 Remote maintenance

**SUGGESTION:** When troubles occur, please check the following points with customers before field maintenance.

| No. | Problem | Solution |
|---|---|---|
| 1 | Unit will not start | TS15 - TS16 |
| 2 | The power switch is on but fans will not start | TS15 - TS16 |
| 3 | The temperature on the display board cannot be set | TS15 - TS16 |
| 4 | Unit is on but the wind is not cold(hot) | TS15 - TS16 |
| 5 | Unit runs, but shortly stops | TS15 - TS16 |
| 6 | The unit starts up and stops frequently | TS15 - TS16 |
| 7 | Unit runs continuously but insufficient cooling(heating) | TS15 - TS16 |
| 8 | Cool can not change to heat | TS15 - TS16 |
| 9 | Unit is noisy | TS15 - TS16 |

## 5.2 Field maintenance

| | Problem | Solution |
|---|---|---|
| 1 | Unit will not start | TS17 - TS18 |
| 2 | Compressor will not start but fans run | TS17 - TS18 |
| 3 | Compressor and condenser (outdoor) fan will not start | TS17 - TS18 |
| 4 | Evaporator (indoor) fan will not start | TS17 - TS18 |
| 5 | Condenser (Outdoor) fan will not start | TS17 - TS18 |
| 6 | Unit runs, but shortly stops | TS17 - TS18 |
| 7 | Compressor short-cycles due to overload | TS17 - TS18 |
| 8 | High discharge pressure | TS17 - TS18 |
| 9 | Low discharge pressure | TS17 - TS18 |
| 10 | High suction pressure | TS17 - TS18 |
| 11 | Low suction pressure | TS17 - TS18 |
| 12 | Unit runs continuously but insufficient cooling | TS17 - TS18 |
| 13 | Too cool | TS17 - TS18 |
| 14 | Compressor is noisy | TS17 - TS18 |
| 15 | Horizontal louver can not revolve | TS17 - TS18 |

| 1.Remote Maintenance | Electrical Circuit | | | | | | | Refrigerant Circuit | | | | | | | |
|---|---|---|---|---|---|---|---|---|---|---|---|---|---|---|---|
| **Possible causes of trouble** | Power failure | The main power tripped | Loose connections | Faulty transformer | The voltage too high or too low | The remote control is powered off | Broken the remote control | Dirty air filter | Dirty condenser fins | The setting temperature is higher/lower than the room's(cooling/heating) | The ambient temperature is too high/low when the mode is cooling/heating | Fan mode | SILENCE function is activated(Optional function) | Frosting and defrosting frequently |
| Unit will not start | ☆ | ☆ | ☆ | ☆ | | | | | | | | | | |
| The power switch is on but fans will not start | | | ☆ | ☆ | ☆ | | | | | | | | | |
| The tempreture on the playboard cannot be setted | | | | | | ☆ | ☆ | | | | | | | |
| Unit is on but the wind is not cold(hot) | | | | | | | | | | ☆ | ☆ | ☆ | | |
| Unit runs, but shortly stops | | | | | ☆ | | | | | ☆ | ☆ | | | |
| The unit startup and stop frequently | | | | | ☆ | | | | | | ☆ | | | ☆ |
| Unit runs continuously but insufficient cooling(heating) | | | | | | | | ☆ | ☆ | ☆ | ☆ | | ☆ | |
| Cool can not change to heat | | | | | | | | | | | | | | |
| Unit is noisy | | | | | | | | | | | | | | |
| **Test method / remedy** | Test voltage | Close the power switch | Inspect connections - tighten | Change the transformer | Test voltage | Replace the battery of the remote control | Replace the remote control | Clean or replace | Clean | Adjust the setting temperature | Turn on the AC later | Adjust to cool mode | Turn off the SILENCE funciton | Turn on the AC later |

| 1.Remote Maintenance | Others | | | | | | |
|---|---|---|---|---|---|---|---|
| **Possible causes of trouble** | Heavy load condition | Loosen hold down bolts and / or screws | Bad airproof | The air inlet or outlet of either unit is blocked | Interference from cell phone towers and remote boosters | Shipping plates remain attached | |
| Unit will not start | | | | | | | |
| The power switch is on but fans will not start | | | | | ☆ | | |
| The temperature on the display board cannot be set | | | | | | | |
| Unit is on but the wind is not cold(hot) | | | | | | | |
| Unit runs, but shortly stops | | | | | | | |
| The unit starts up and stops frequently | | | | ☆ | | | |
| Unit runs continuously but insufficient cooling(heating) | ☆ | | ☆ | ☆ | | | |
| Cool can not change to heat | | | | | | | |
| Unit is noisy | | ☆ | | | | ☆ | |
| **Test method / remedy** | Check heat load | Tighten bolts or screws | Close all the windows and doors | Remove the obstacles | Reconnect the power or press **ON/OFF** button on remote control to restart operation | Remove them | |

| 2.Field Maintenance | Refrigerant Circuit | | | | | | | | | | | | | | | | | | | Others | | | | |
|---|---|---|---|---|---|---|---|---|---|---|---|---|---|---|---|---|---|---|---|---|---|---|---|---|
| **Possible causes of trouble** | Compressor stuck | Shortage of refrigerant | Restricted liquid line | Dirty air filter | Dirty evaporator coil | Insufficient air through evaporator coil | Overcharge of refrigerant | Dirty or partially blocked condenser | Air or incompressible gas in refrigerant cycle | Short cycling of condensing air | High temperature condensing medium | Insufficient condensing medium | Broken compressor internal parts | Inefficient compressor | Expansion valve obstructed | Expansion valve or capillary tube closed completely | Leaking power element on expansion valve | Poor installation of feeler bulb | Heavy load condition | Loosen hold down bolts and / or screws | Shipping plates remain attached | Poor choices of capacity | Contact of piping with other piping or external plate |
| Unit will not start | | | | | | | | | | | | | | | | | | | | | | | |
| Compressor will not start but fans run | ☆ | | | | | | | | | | | | | | | | | | | | | | |
| Compressor and condenser (outdoor) fan will not start | | | | | | | | | | | | | | | | | | | | | | | |
| Evaporator (indoor) fan will not start | | | | | | | | | | | | | | | | | | | | | | | |
| Condenser (Outdoor) fan will not start | | | | | | | | | | | | | | | | | | | | | | | |
| Unit runs, but shortly stops | | ☆ | ☆ | | | | ☆ | ☆ | | | | | | | | ☆ | ☆ | | | | | | |
| Compressor short-cycles due to overload | | ☆ | | | | | ☆ | ☆ | | | | | | | | | | | | | | | |
| High discharge pressure | | | | | | | ☆ | ☆ | ☆ | ☆ | ☆ | ☆ | | | | | | | | | | | |
| Low discharge pressure | | ☆ | | | | | | | | | | | | ☆ | | | | | | | | | |
| High suction pressure | | | | | | | ☆ | | | | | | | ☆ | | | | ☆ | ☆ | | | | |
| Low suction pressure | | ☆ | ☆ | ☆ | ☆ | ☆ | | | | | | | | | ☆ | ☆ | ☆ | | | | | | |
| Unit runs continuously but insufficient cooling | | ☆ | ☆ | ☆ | ☆ | ☆ | | ☆ | ☆ | ☆ | | | | ☆ | | | | | ☆ | | | ☆ | |
| Too cool | | | | | | | | | | | | | | | | | | | | | | | |
| Compressor is noisy | | | | | | | ☆ | | | | | | ☆ | | | | | | | ☆ | ☆ | | ☆ |
| Horizontal louver can not revolve | | | | | | | | | | | | | | | | | | | | | | | |
| **Test method / remedy** | Replace the compressor | Leak test | Replace restricted part | Clean or replace | Clean coil | Check fan | Change charged refrigerant volume | Clean condenser or remove obstacle | Purge, evacuate and recharge | Remove obstruction to air flow | Remove obstruction in air or water flow | Remove obstruction in air or water flow | Replace compressor | Test compressor efficiency | Replace valve | Replace valve | Replace valve | Fix feeler bulb | Check heat load | Tighten bolts or screws | Remove them | Choose AC of lager capacity or add the number of AC | Rectify piping so as not to contact each other or with external plate |

| 2.Field Maintenance | Electrical Circuit | | | | | | | | | | | | | | |
|---|---|---|---|---|---|---|---|---|---|---|---|---|---|---|---|
| **Possible causes of trouble** | Power failure | Blown fuse or varistor | Loose connections | Shorted or broken wires | Safety device opens | Faulty thermostat / room temperature sensor | Wrong setting place of temperature sensor | Faulty transformer | Shorted or open capacitor | Faulty magnetic contactor for compressor | Faulty magnetic contactor for fan | Low voltage | Faulty stepping motor | Shorted or grounded compressor | Shorted or grounded fan motor |
| Unit will not start | ☆ | ☆ | ☆ | ☆ | ☆ | | | ☆ | | | | | | | |
| Compressor will not start but fans run | | | | ☆ | | ☆ | | | ☆ | ☆ | | | | ☆ | |
| Compressor and condenser (outdoor) fan will not start | | | | ☆ | | ☆ | | | | ☆ | | | | | |
| Evaporator (indoor) fan will not start | | | | ☆ | | | | | ☆ | | ☆ | | | | ☆ |
| Condenser (Outdoor) fan will not start | | | | ☆ | | ☆ | | | ☆ | | ☆ | | | | ☆ |
| Unit runs, but shortly stops | | | | | | | | | | ☆ | | ☆ | | | |
| Compressor short-cycles due to overload | | | | | | | | | | ☆ | | ☆ | | | |
| High discharge pressure | | | | | | | | | | | | | | | |
| Low discharge pressure | | | | | | | | | | | | | | | |
| High suction pressure | | | | | | | | | | | | | | | |
| Low suction pressure | | | | | | | | | | | | | | | |
| Unit runs continuously but insufficient cooling | | | | | | | | | | | | | | | |
| Too cool | | | | | | ☆ | ☆ | | | | | | | | |
| Compressor is noisy | | | | | | | | | | | | | | | |
| Horizontal louver can not revolve | | | ☆ | ☆ | | | | | | | | | ☆ | | |
| **Test method / remedy** | Test voltage | Inspect fuse type & size | Inspect connections - tighten | Test circuits with tester | Test continuity of safety device | Test continuity of thermostat / sensor & wiring | Place the temperature sensor at the central of the air inlet grille | Check control circuit with tester | Check capacitor with tester | Test continuity of coil & contacts | Test continuity of coil & contacts | Test voltage | Replace the stepping motor | Check resistance with multimeter | Check resistance with multimeter |

## 6. Quick Maintenance by Error Code

If you do not have the time to test which specific parts are faulty, you can directly change the required parts according the error code. You can find the parts to replace by error code in the following table.

| Part requiring replacement | Error Code | | | | | | | | | |
|---|---|---|---|---|---|---|---|---|---|---|
| | EH00/ EH0A | EL01 | EH02 | EH03 | EH60 | EH61 | EH0b | EL0C | EC56 | PC08 |
| Indoor PCB | ✓ | ✓ | ✓ | ✓ | ✓ | ✓ | ✓ | ✓ | x | x |
| Outdoor PCB | x | ✓ | x | x | x | x | x | x | ✓ | ✓ |
| Display board | x | x | x | x | x | x | ✓ | x | x | x |
| Indoor fan motor | x | x | x | ✓ | x | x | x | x | x | x |
| T1 sensor | x | x | x | x | ✓ | x | x | x | x | x |
| T2 Sensor | x | x | x | x | x | ✓ | x | ✓ | x | x |
| T2B Sensor | x | x | x | x | x | x | x | x | ✓ | x |
| Reactor | x | ✓ | x | x | x | x | x | x | x | x |
| Compressor | x | x | x | x | x | x | x | x | x | ✓ |
| Additional refrigerant | x | x | x | x | x | x | x | ✓ | x | x |

| Part requiring replacement | EC53 | EC52 | EC54 | EC51 | EC07 | PC00 | PC01 | PC02 | PC03 | PC04 |
|---|---|---|---|---|---|---|---|---|---|---|
| Outdoor PCB | ✓ | ✓ | ✓ | ✓ | ✓ | ✓ | ✓ | ✓ | ✓ | ✓ |
| Indoor fan motor | x | x | x | x | x | x | x | x | x | x |
| Outdoor fan motor | x | x | x | x | ✓ | ✓ | x | ✓ | x | ✓ |
| T3 Sensor | x | ✓ | x | x | x | x | x | x | x | x |
| T4 Sensor | ✓ | x | x | x | x | x | x | x | x | x |
| TP Sensor | x | x | ✓ | x | x | x | x | x | x | x |
| Reactor | x | x | x | x | x | x | ✓ | x | x | x |
| Compressor | x | x | x | x | x | ✓ | x | x | x | ✓ |
| IPM module board | x | x | x | x | x | ✓ | ✓ | ✓ | x | ✓ |
| High pressure protector | x | x | x | x | x | x | x | ✓ | x | x |
| Low pressure protector | x | x | x | x | x | x | x | x | ✓ | x |
| Additional refrigerant | x | x | x | x | x | x | x | x | ✓ | x |

**Note: For certain models, outdoor PCB could not be removed separately. In this case, the outdoor electric control box should be replaced as a whole.**

# 7. Troubleshooting by Error Code

## TS01-IDU: Indoor EEPROM parameter error diagnosis and solution

**Description**: Indoor PCB main chip does not receive feedback from EEPROM chip.

**Recommended parts to prepare:**

- Indoor PCB

**Troubleshooting and repair:**

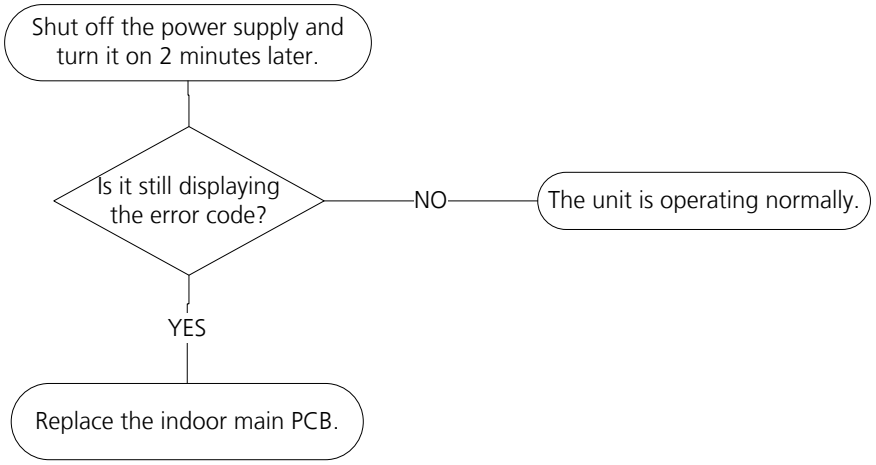


**Remarks:**
**EEPROM:** A read-only memory whose contents can be erased and reprogrammed using a pulsed voltage.

The location of the EEPROM chip on the indoor PCB is shown in the following image:

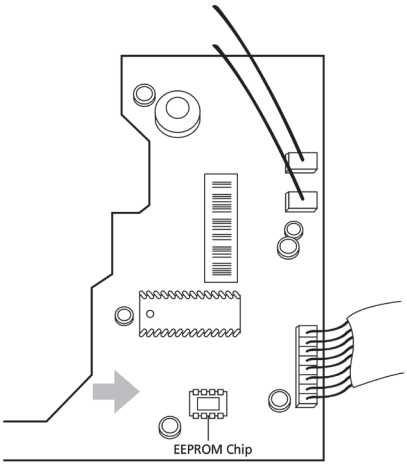


**Note: This pictures are only for reference, actual appearance may vary.**

## TS01-ODU: Outdoor EEPROM parameter error or communication error between outdoor main chip and compressor driven chip diagnosis and solution

**Description**: Outdoor PCB main chip does not receive feedback from EEPROM chip or compressor driven chip.

**Recommended parts to prepare:**

- Outdoor PCB

**Troubleshooting and repair:**

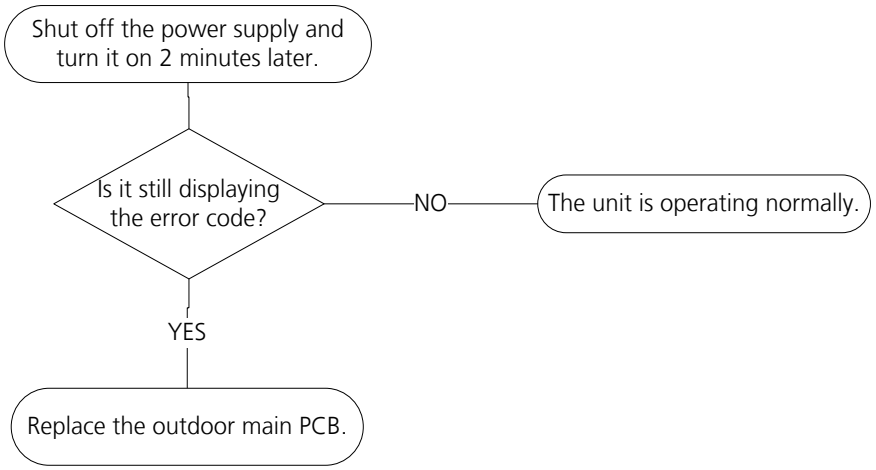


**Remarks:**
**EEPROM:** A read-only memory whose contents can be erased and reprogrammed using a pulsed voltage.

The location of the EEPROM chip on the outdoor PCB is shown in the following image:

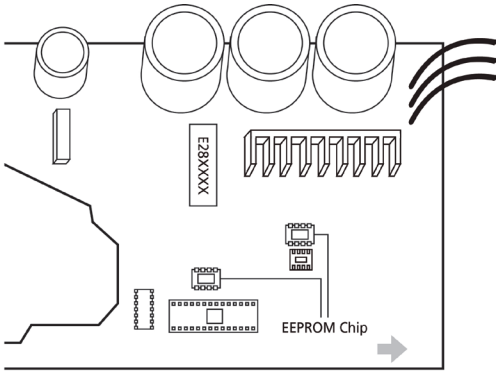


**Note: For certain models, outdoor PCB could not be removed separately. In this case, the outdoor electric control box should be replaced as a whole. This pictures are only for reference, actual appearance may vary.**

## TS02-S-INV: Indoor and outdoor unit communication error diagnosis and solution

**Description**: Indoor unit can not communicate with outdoor unit

**Recommended parts to prepare:**

- Indoor PCB
- Outdoor PCB
- Short-circuited component

**Troubleshooting and repair:**

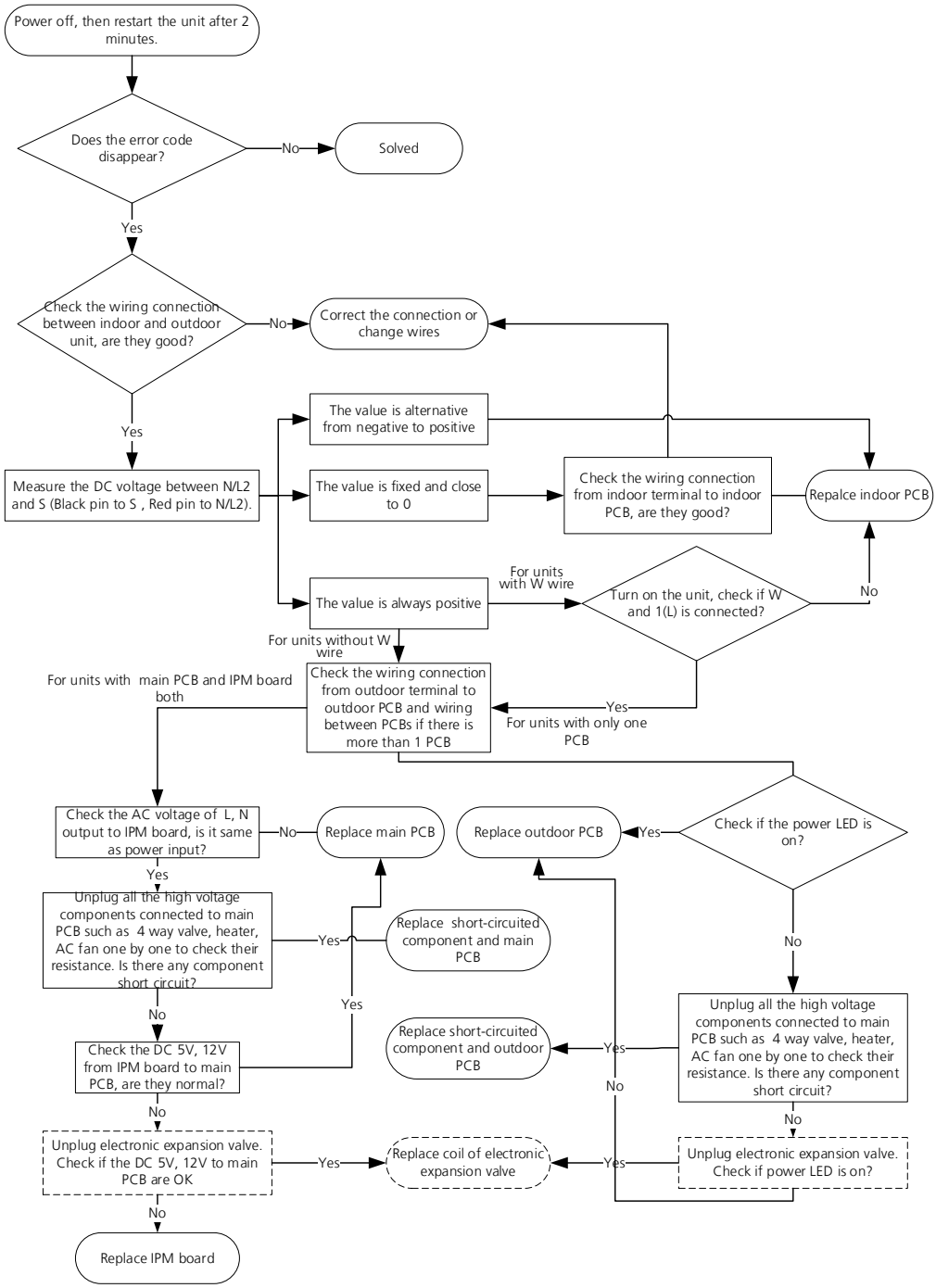


**Note: For certain models, outdoor PCB could not be removed separately. In this case, the outdoor electric control box should be replaced as a whole.**

**Remarks:**

- Use a multimeter to test the DC voltage between 2 port(or S or L2 port) and 3 port(or N or S port) of outdoor unit. The red pin of multimeter connects with 2 port(or S or L2 port) while the black pin is for 3 port(or N or S port) .
- When AC is normal running, the voltage will move alternately between -25V to 25V.
- If the outdoor unit has malfunction, the voltage will move alternately with positive value.
- While if the indoor unit has malfunction, the voltage will be a certain value.

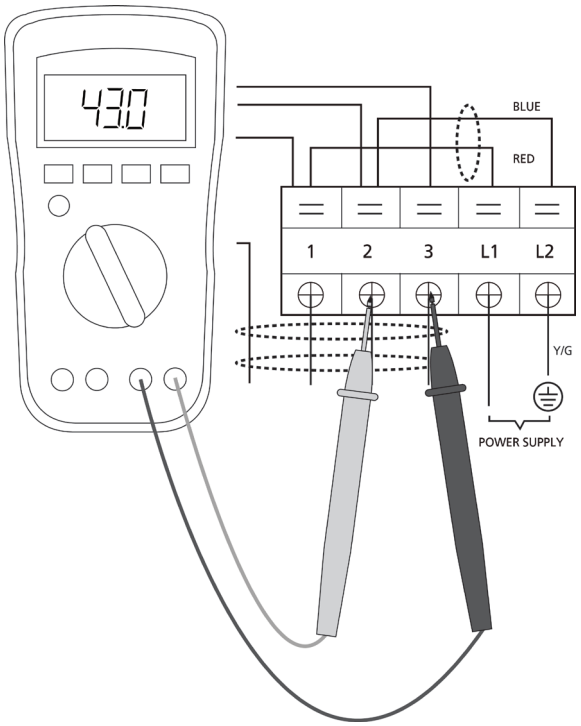


**S and N or L2 and S or 2 and 3**

- Use a multimeter to test the resistance of the reactor which does not connect with capacitor.
- The normal value should be around zero ohm. Otherwise, the reactor must have malfunction.

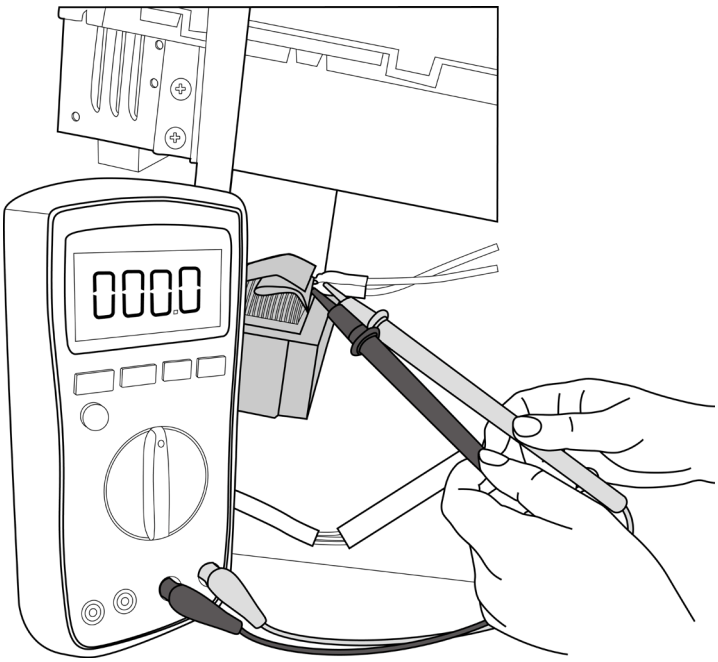


**Note: The picture and the value are only for reference, actual condition and specific value may vary.**

## TS03: Zero crossing detection error diagnosis and solution

**Description**: When PCB does not receive zero crossing signal feedback for 4 minutes or the zero crossing signal time interval is abnormal.

**Recommended parts to prepare:**

- Connection wires
- Indoor main PCB

**Troubleshooting and repair:**

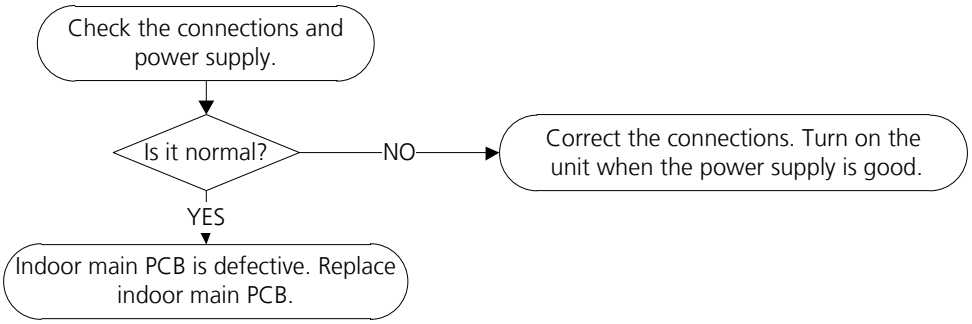


**Note: E2 zero crossing detection error is only valid for the unit with AC fan motor, for other models, this error is invalid.**

## TS04-S-IDU: The Indoor fan speed is operating outside of normal range diagnosis and solution)

**Description**: When indoor fan speed keeps too low or too high for a certain time, the LED displays the failure code and the AC turns off.

**Recommended parts to prepare:**

- Connection wires
- Fan assembly
- Fan motor
- Indoor main PCB

**Troubleshooting and repair:**

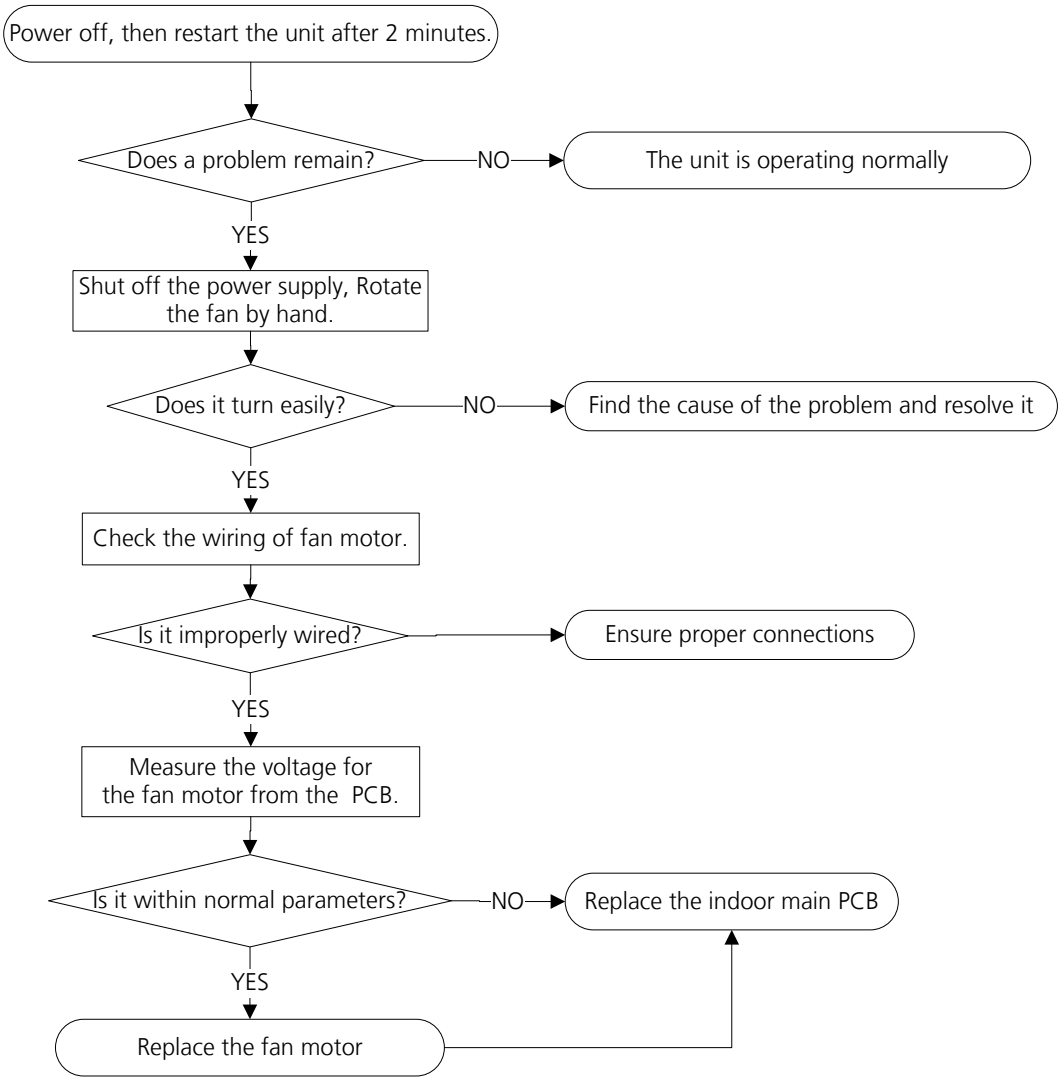

**Index:**

### 1. Indoor or Outdoor DC Fan Motor(control chip is in fan motor)

Power on and when the unit is in standby, measure the voltage of pin1-pin3, pin4-pin3 in fan motor connector. If the value of the voltage is not in the range showing in below table, the PCB must has problems and need to be replaced.

- DC motor voltage input and output (voltage: 220-240V~):

| No. | Color | Signal | Voltage |
|---|---|---|---|
| 1 | Red | Vs/Vm | 192V~380V |
| 2 | --- | --- | --- |
| 3 | Black | GND | 0V |
| 4 | White | Vcc | 14-17.5V |
| 5 | Yellow | Vsp | 0~5.6V |
| 6 | Blue | FG | 14-17.5V |

- DC motor voltage input and output (voltage: 115V~):

| No. | Color | Signal | Voltage |
|---|---|---|---|
| 1 | Red | Vs/Vm | 140V~190V |
| 2 | --- | --- | --- |
| 3 | Black | GND | 0V |
| 4 | White | Vcc | 14-17.5V |
| 5 | Yellow | Vsp | 0~5.6V |
| 6 | Blue | FG | 14-17.5V |

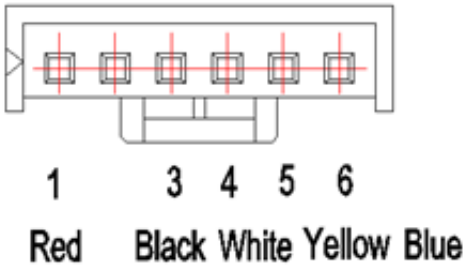


### 2. Indoor AC Motor

1) Power on and set the unit running in fan mode at high fan speed. After running for 15 seconds, measure the voltage of pin1 and pin2. If the value of the voltage is less than 100V(208~240V power supply) or 50V (115V power supply), the PCB must has problems and need to be replaced.

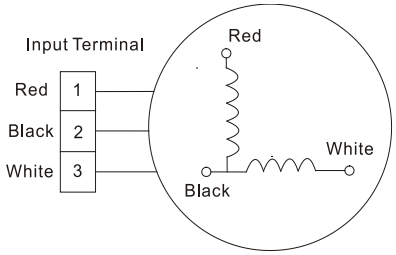

## TS04-ODU: The outdoor fan speed is operating outside of normal range diagnosis and solution)

**Description**: When outdoor fan speed keeps too low or too high for a certain time, the LED displays the failure code and the AC turns off.

**Recommended parts to prepare:**

- Connection wires
- Fan assembly
- Fan motor
- Outdoor main PCB

**Troubleshooting and repair:**

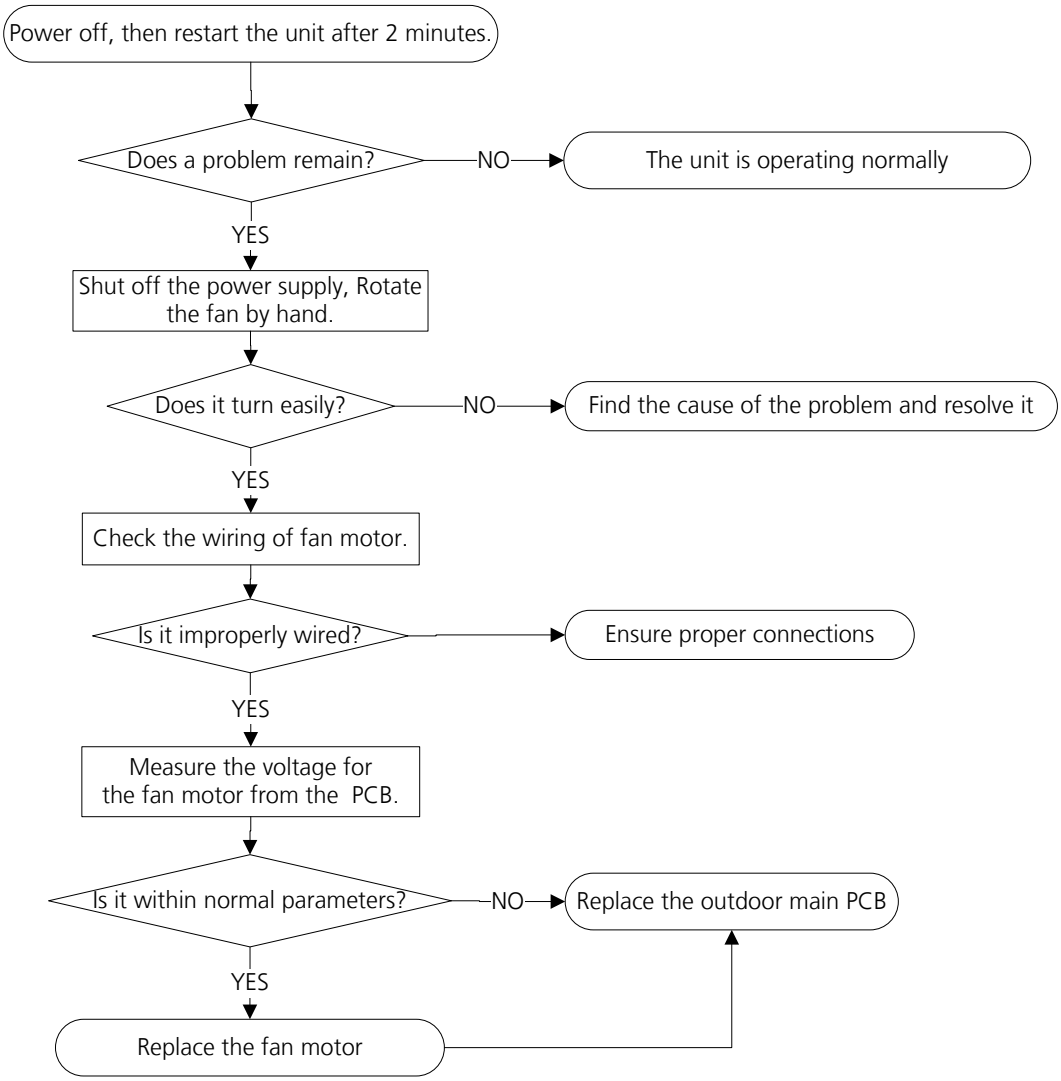


**Note: For certain models, outdoor PCB could not be removed separately. In this case, the outdoor electric control box should be replaced as a whole.**

**Index:**

### 1. Outdoor DC Fan Motor (control chip is in outdoor PCB)

Release the UVW connector. Measure the resistance of U-V, U-W, V-W. If the resistance is not equal to each other, the fan motor must has problems and need to be replaced. otherwise the PCB must has problems and need to be replaced.

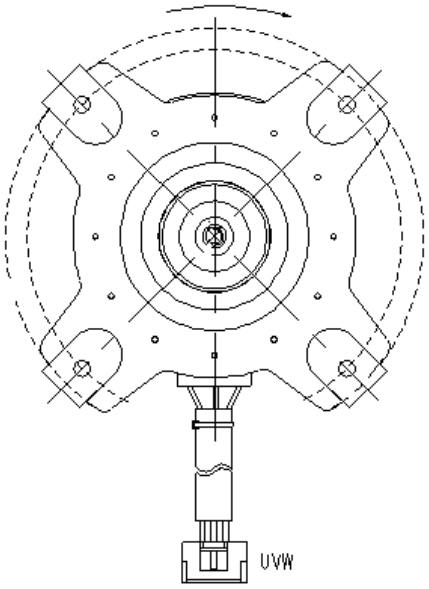


### 2. DC Fan Motor(control chip is in fan motor, single fan)

Power on and when the unit is in standby, measure the voltage of pin1-pin3, pin4-pin3 in fan motor connector. If the value of the voltage is not in the range showing in below table, the PCB must has problems and need to be replaced.

| No. | Color | Signal | Voltage |
|---|---|---|---|
| 1 | Red | Vs/Vm | 192V~380V |
| 2 | --- | --- | --- |
| 3 | Black | GND | 0V |
| 4 | White | Vcc | 13.5-16.5V |
| 5 | Yellow | Vsp | 0~6.5V |
| 6 | Blue | FG | 13.5-16.5V |

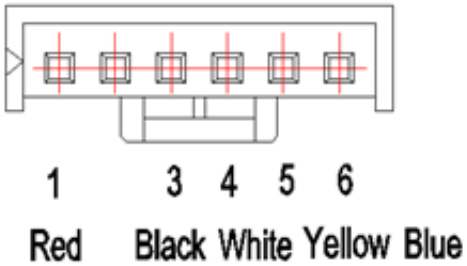

## TS05-IDU: Open circuit or short circuit of indoor temperature sensor(T1, T2) diagnosis and solution

**Description**: If the sampling voltage is lower than 0.06V or higher than 4.94V, the LED displays the failure code.

**Recommended parts to prepare:**

- Connection wires
- Sensors
- Indoor main PCB

**Troubleshooting and repair:**

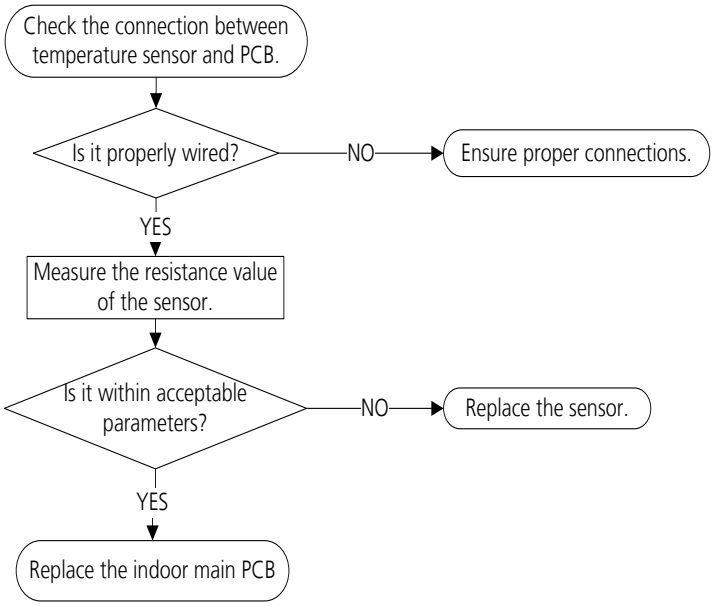


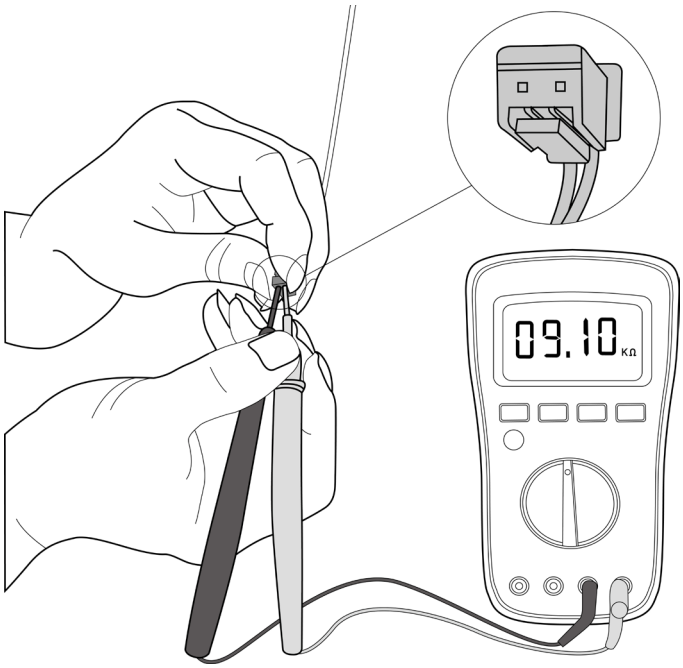


**Note: This picture and the value are only for reference, actual appearance and value may vary.**

## TS05-ODU: Open circuit or short circuit of outdoor temperature sensor(T3, T4, TP, T2B,TH) diagnosis and solution

**Description**: If the sampling voltage is lower than 0.06V or higher than 4.94V, the LED displays the failure code.

**Recommended parts to prepare:**

- Connection wires
- Sensors
- Outdoor main PCB

**Troubleshooting and repair:**

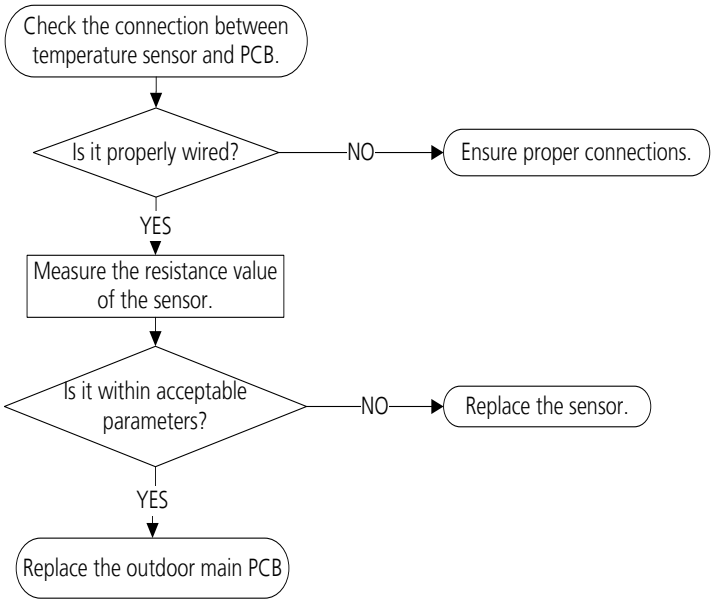


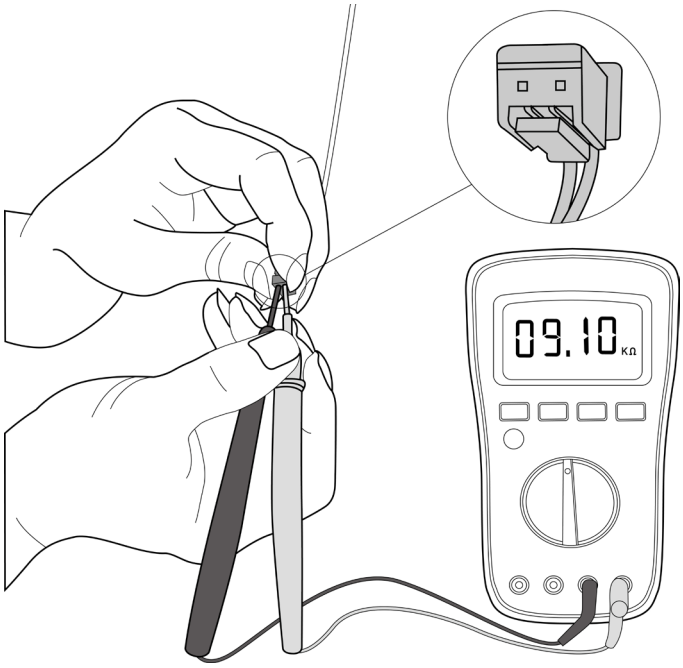


**Note: For certain models, outdoor PCB could not be removed separately. In this case, the outdoor electric control box should be replaced as a whole. For certain models, outdoor unit uses combination sensor, T3,T4 and TP are the same of sensor. This picture and the value are only for reference, actual appearance and value may vary.**

## TS06-INV: Refrigerant Leakage Detection diagnosis and solution

**Description**:

Judging the abnormality of the refrigeration system according to the number of compressor stops and the changes in operating parameters caused by excessive exhaust temperature.

**Recommended parts to prepare:**

- Indoor PCB
- Additional refrigerant

**Troubleshooting and repair:**

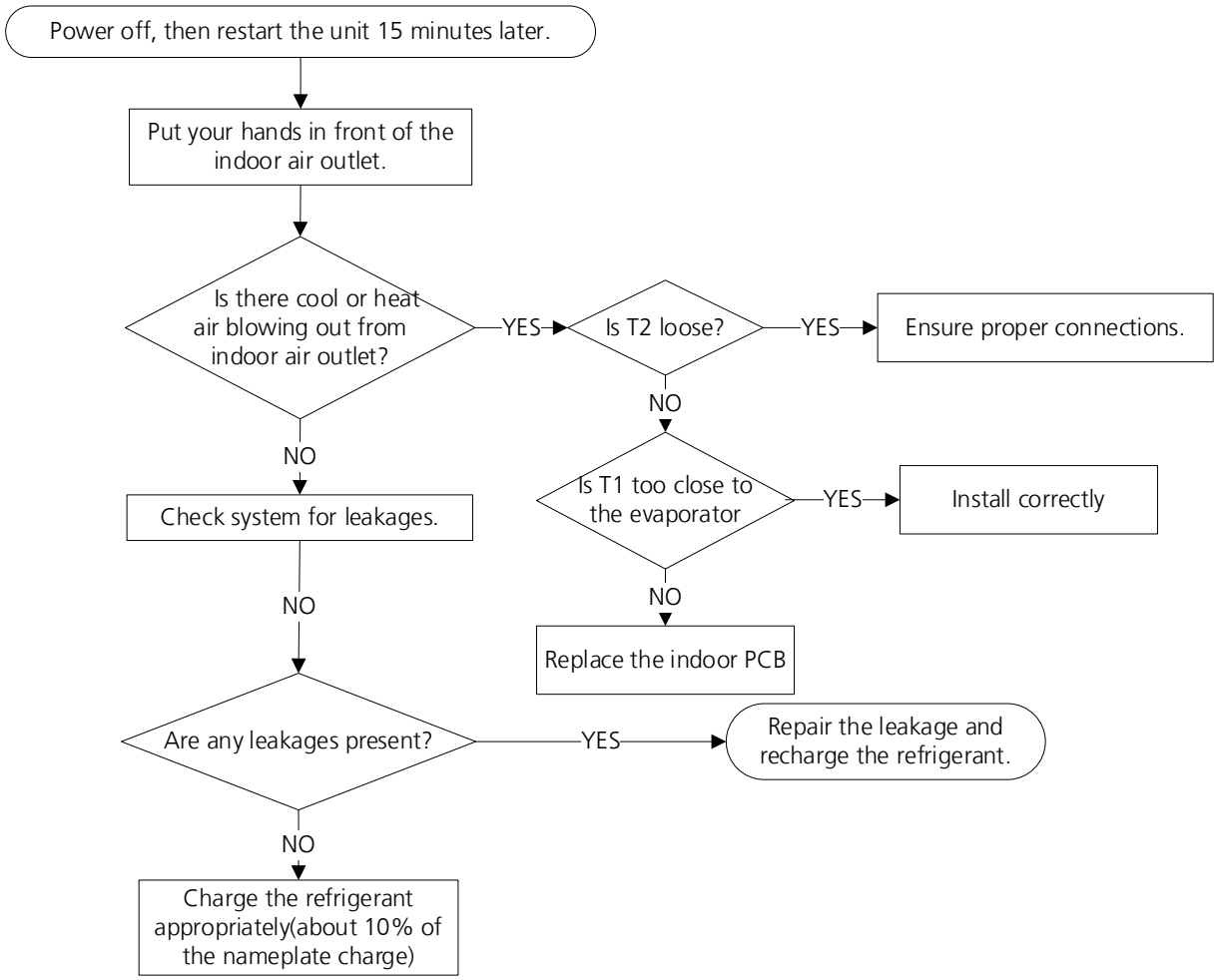

## TS07: Indoor PCB / Display board communication error diagnosis and solution

**Description**: Indoor PCB does not receive feedback from the display board.

**Recommended parts to prepare:**

- Communication wire
- Indoor PCB
- Display board

**Troubleshooting and repair:**

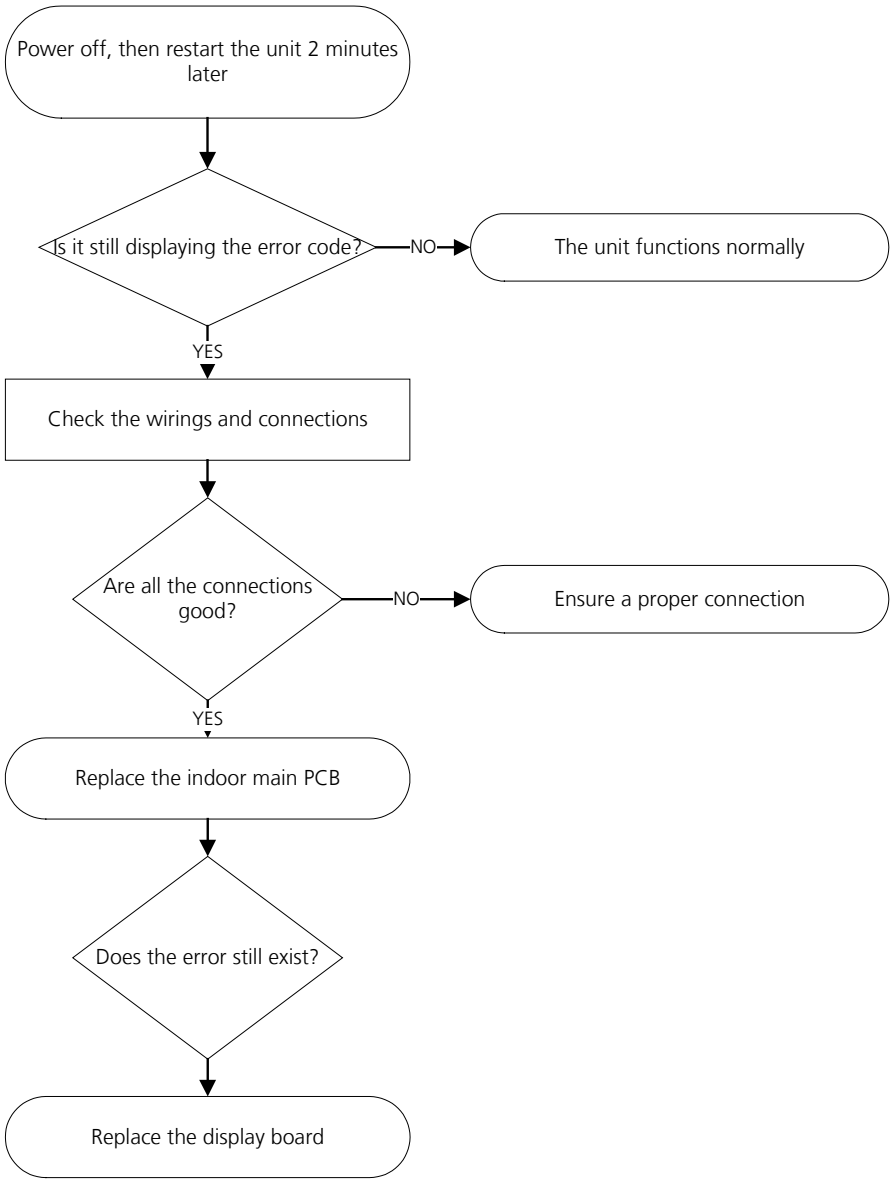

## TS08-S: Current overload protection diagnosis and solution

**Description**: An abnormal current rise is detected by checking the specified current detection circuit.

**Recommended parts to prepare:**

- Connection wires
- Reactor
- Outdoor fan
- Outdoor PCB

**Troubleshooting and repair:**

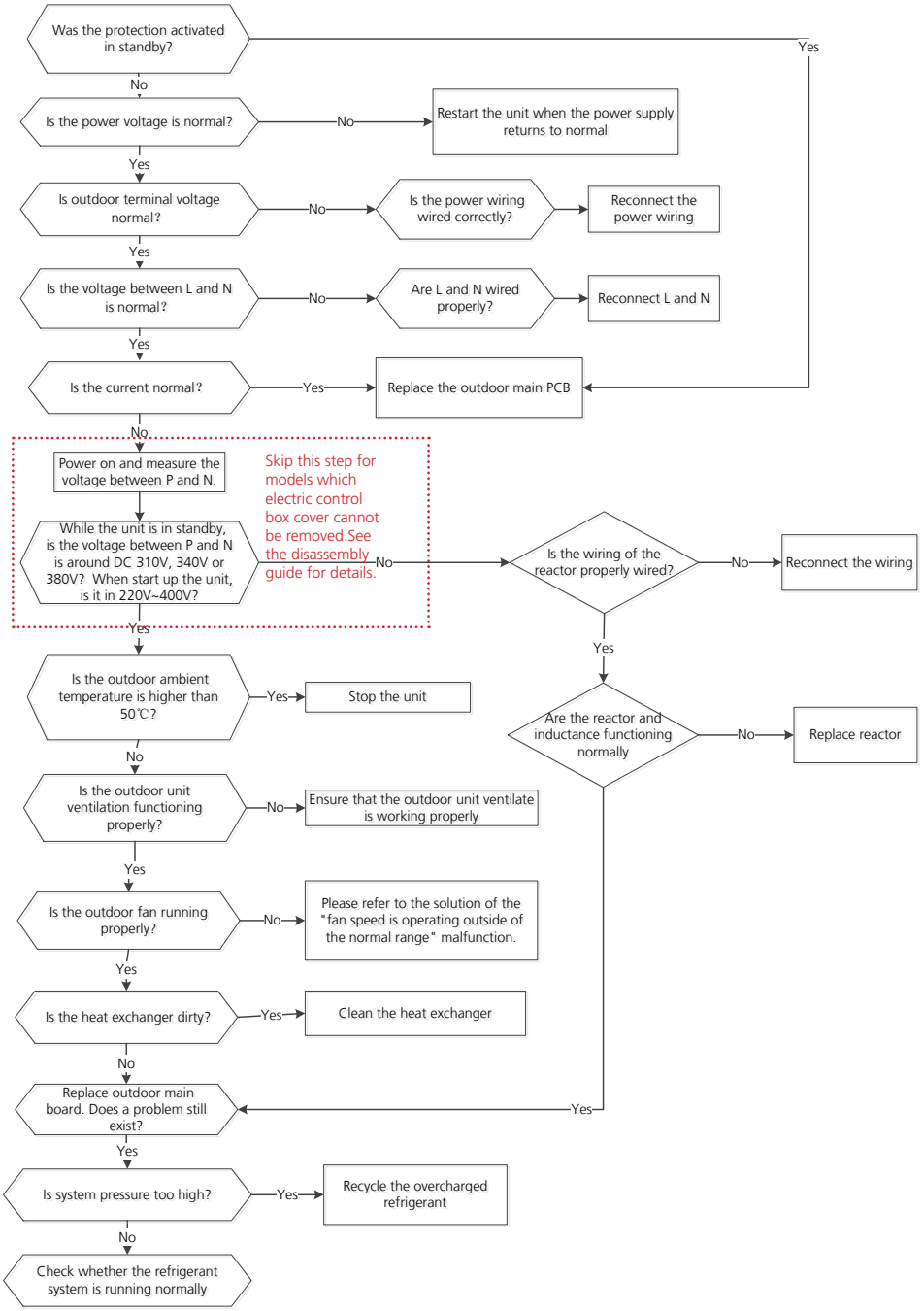


**Note: For certain models, outdoor PCB could not be removed separately. In this case, the outdoor electric control box should be replaced as a whole.**

## TS09-S: IPM malfunction or IGBT over-strong current protection diagnosis and solution

**Description:** When the voltage signal the IPM sends to the compressor drive chip is abnormal, the LED displays the failure code and the AC turns off.

**Recommended parts to prepare:**

- Connection wires
- IPM module board
- Outdoor fan assembly
- Compressor
- Outdoor PCB

**Troubleshooting and repair:**

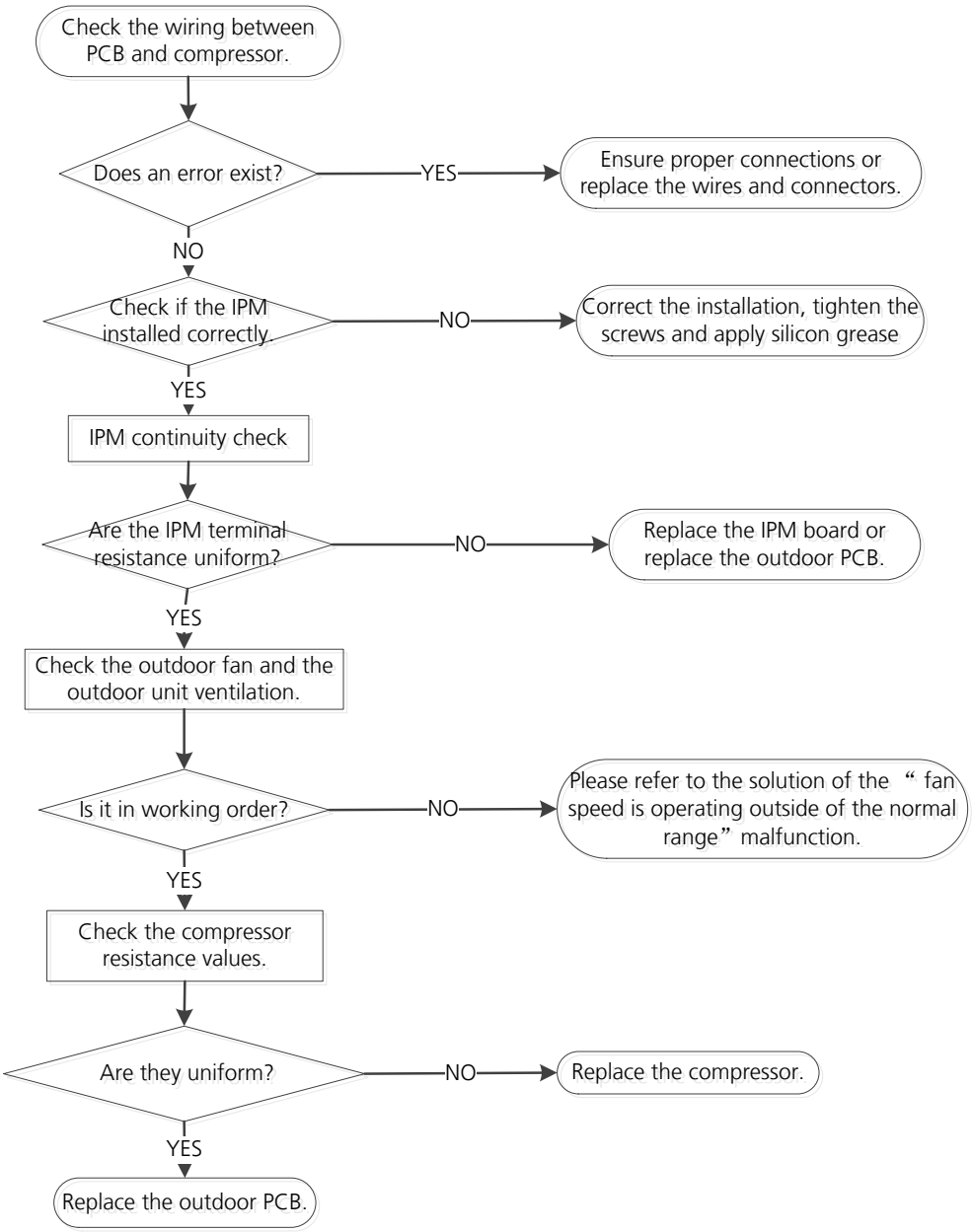


**Note: For certain models, outdoor PCB could not be removed separately. In this case, the outdoor electric control box should be replaced as a whole.**

## TS10-S: Over voltage or too low voltage protection diagnosis and solution

**Description:** Abnormal increases or decreases in voltage are detected by checking the specified voltage detection circuit.

**Recommended parts to prepare:**

- Power supply wires
- IPM module board
- PCB
- Reactor

**Troubleshooting and repair:**

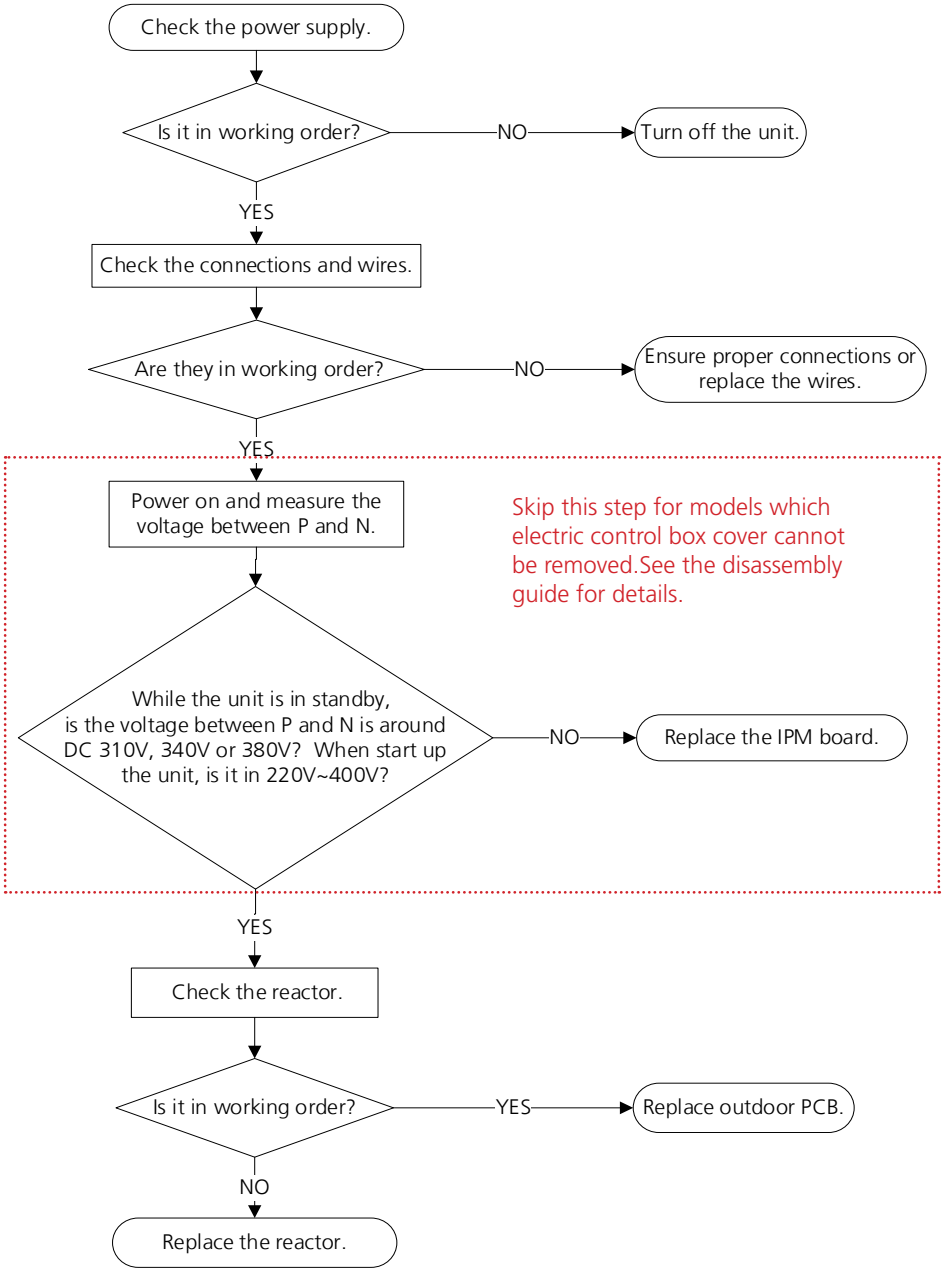


**Note: For certain models, outdoor PCB could not be removed separately. In this case, the outdoor electric control box should be replaced as a whole.**

## TS11-S-INV: Top temperature protection of compressor or High temperature protection of IPM module or High pressure protection diagnosis and solution

**Description:** For some models with overload protection, If the sampling voltage is not 5V, the LED will display the failure.

If the temperature of IPM module is higher than a certain value, the LED displays the failure code.

For some models with high pressure switch, outdoor pressure switch cut off the system because high pressure is higher than 4.4 MPa, the LED displays the failure code.

**Recommended parts to prepare:**

- Connection wires
- Outdoor PCB
- IPM module board
- High pressure protector
- System blockages

**Troubleshooting and repair:**

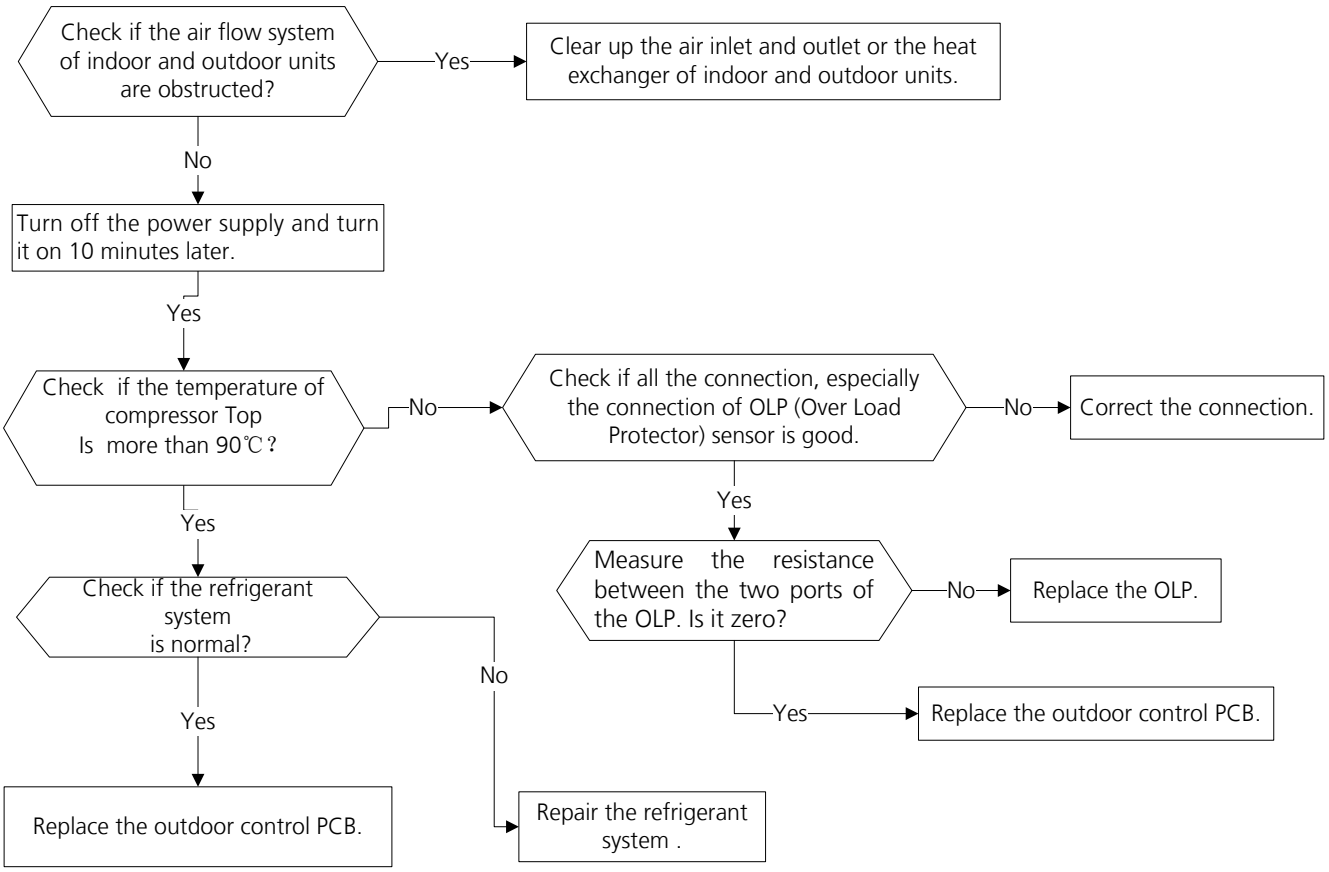


**Note: For certain models, outdoor PCB could not be removed separately. In this case, the outdoor electric control box should be replaced as a whole.**

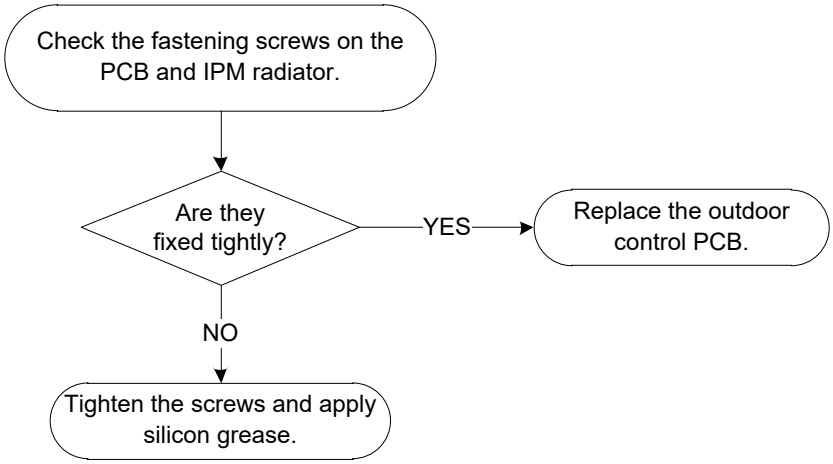


**Note: For certain models, outdoor PCB could not be removed separately. In this case, the outdoor electric control box should be replaced as a whole.**

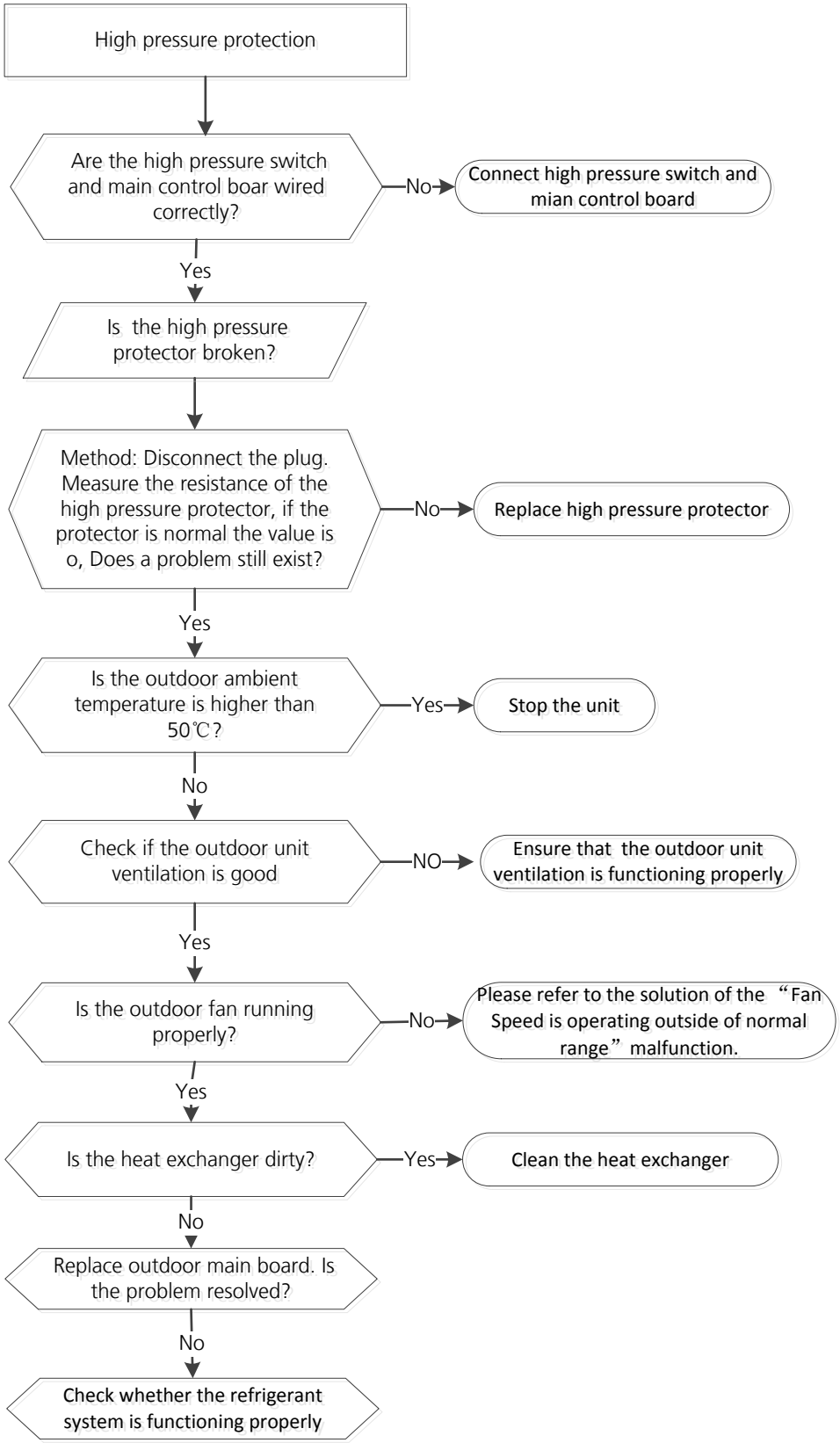


**Note: For certain models, outdoor PCB could not be removed separately. In this case, the outdoor electric control box should be replaced as a whole.**

## TS12-S: Inverter compressor drive error diagnosis and solution

**Description:** An abnormal inverter compressor drive is detected by a special detection circuit, including communication signal detection, voltage detection, compressor rotation speed signal detection and so on.

**Recommended parts to prepare:**

- Connection wires
- IPM module board
- Outdoor fan assembly
- Compressor
- Outdoor PCB

**Troubleshooting and repair:**

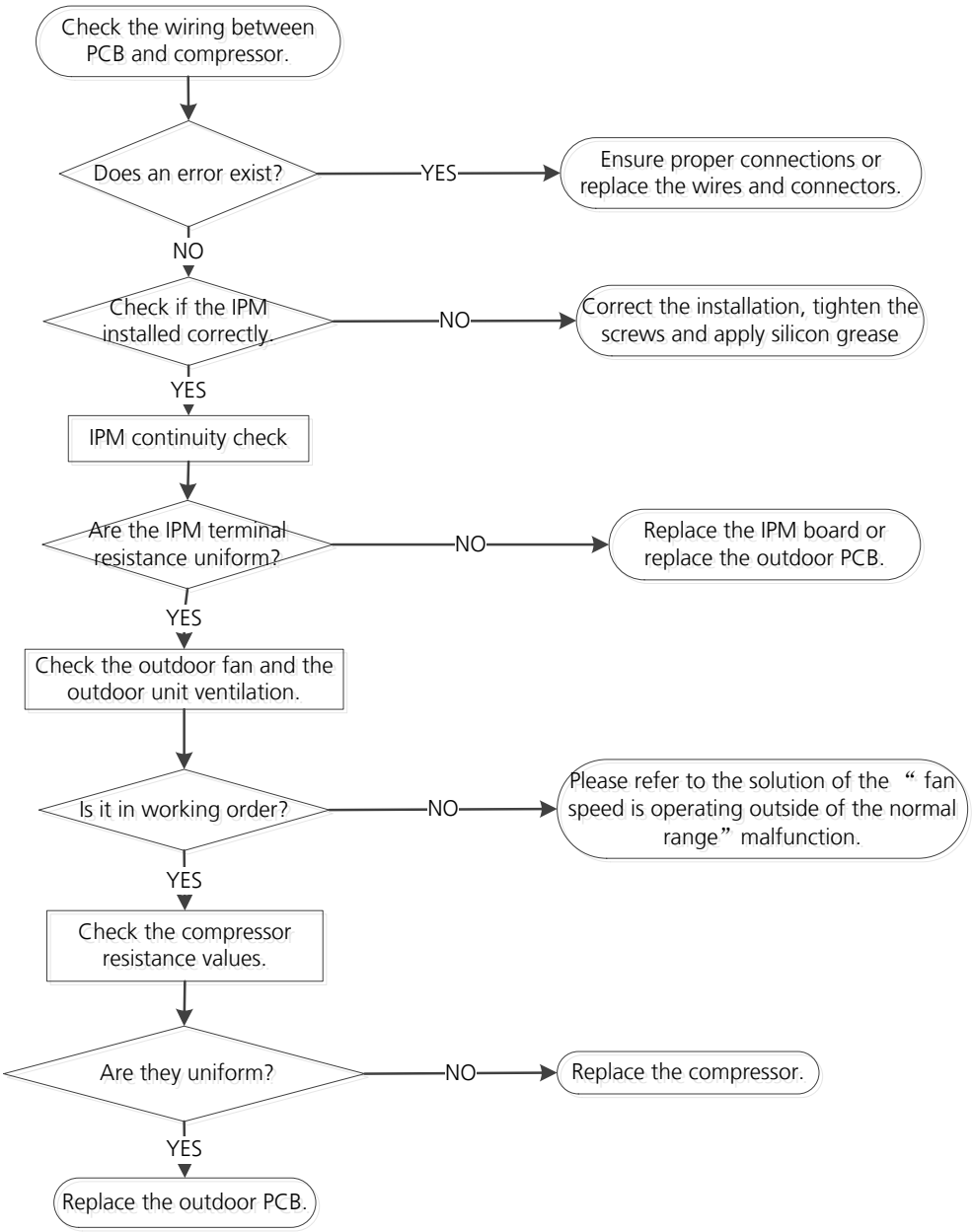


**Note: For certain models, outdoor PCB could not be removed separately. In this case, the outdoor electric control box should be replaced as a whole.**

## TS26-INV: High pressure protection or Low pressure protection diagnosis and solution

**Description:** Outdoor pressure switch cut off the system because high pressure is higher than 4.4 MPa or outdoor pressure switch cut off the system because low pressure is lower than 0.13 MPa, the LED displays the failure code.

**Recommended parts to prepare:**

- Connection wires
- Outdoor PCB
- Refrigerant
- Pressure switch
- Outdoor fan

**Troubleshooting and repair:**

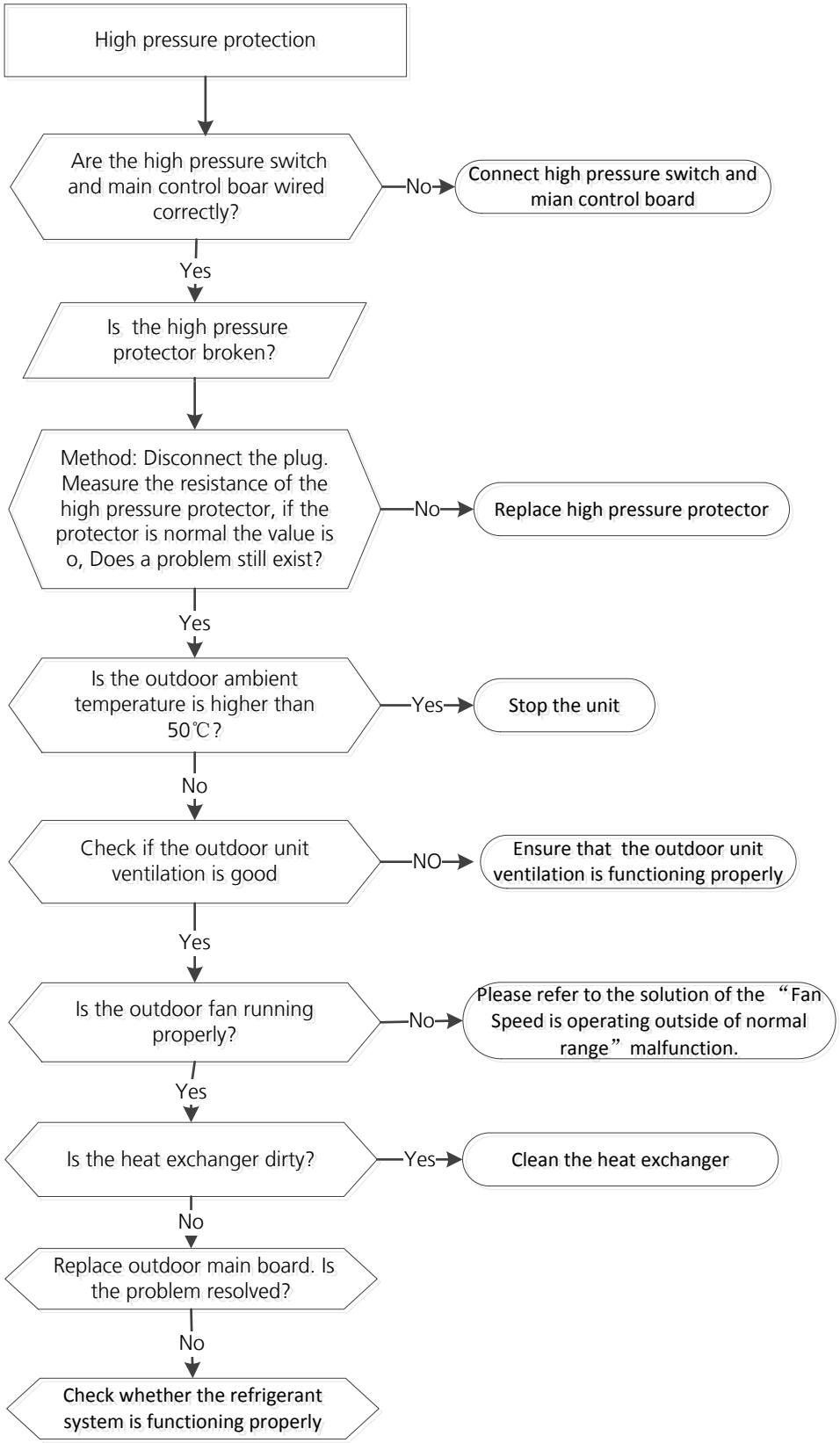
High pressure protection
Are the high pressure switch and main control boar wired correctly?
No
Connect high pressure switch and mian control board
Yes
Is the high pressure protector broken?
Method: Disconnect the plug. Measure the resistance of the high pressure protector, if the protector is normal the value is o, Does a problem still exist?
No
Replace high pressure protector
Yes
Is the outdoor ambient temperature is higher than 50℃?
Yes
Stop the unit
No
Check if the outdoor unit ventilation is good
NO
Ensure that the outdoor unit ventilation is functioning properly
Yes
Is the outdoor fan running properly?
No
Please refer to the solution of the "Fan Speed is operating outside of normal range" malfunction.
Yes
Is the heat exchanger dirty?
Yes
Clean the heat exchanger
No
Replace outdoor main board. Is the problem resolved?
No
Check whether the refrigerant system is functioning properly

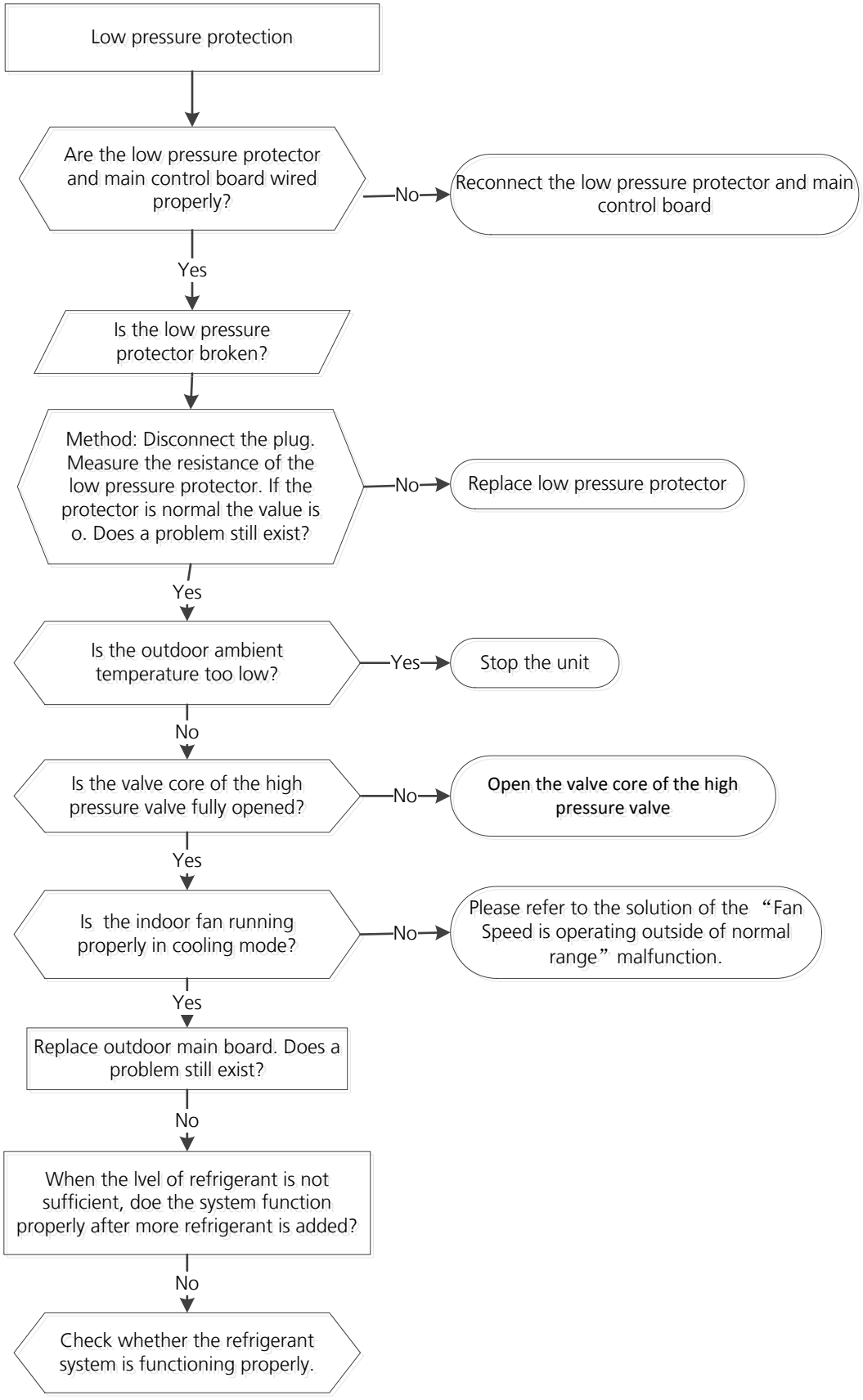


**Note: For certain models, outdoor PCB could not be removed separately. In this case, the outdoor electric control box should be replaced as a whole.**

### TS14: Indoor units mode conflict (match with multi outdoor unit)

**Description:** The indoor units cannot work cooling mode and heating at same time. Heating mode has a priority.

- Suppose Indoor unit A working in cooling mode or fan mode, and indoor unit B is set to heating mode, then A will change to off and B will work in heating mode.
- Suppose Indoor unit A working in heating mode, and indoor unit B is set to cooling mode or fan mode, then B will change to stand by and A will be no change.

| | Cooling mode | Heating Mode | Fan | Off |
|---|---|---|---|---|
| Cooling mode | No | Yes | No | No |
| Heating Mode | Yes | No | Yes | No |
| Fan | No | Yes | No | No |
| Off | No | No | No | No |

**Note:**

**No**: No mode conflict

**Yes**: Mode conflict

### TS34: AP mode is active but there is no WIFI kit installed

**Description:** AP mode is active but cannot detect WIFI kit.

**Recommended parts to prepare:**

- WIFI kit

**Troubleshooting and repair:**

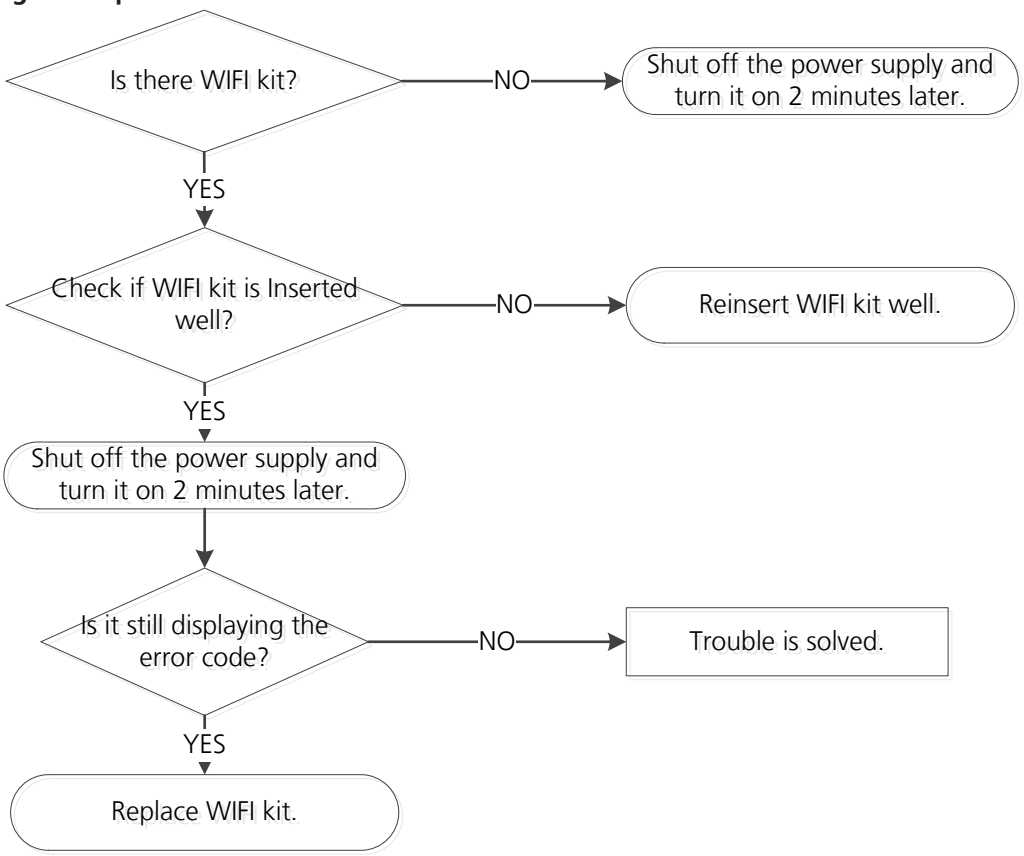

# 8. Check Procedures

## 8.1 Temperature Sensor Check

**WARNING**

**Be sure to turn off all power supplies or disconnect all wires to avoid electric shock.**
**Operate after compressor and coil have returned to normal temperature in case of injury.**

1. Disconnect the temperature sensor from PCB (Refer to Chapter 5&6. Indoor&Outdoor Unit Disassembly).
2. Measure the resistance value of the sensor using a multi-meter.
3. Check corresponding temperature sensor resistance value table (Refer to Chapter 8. Appendix).

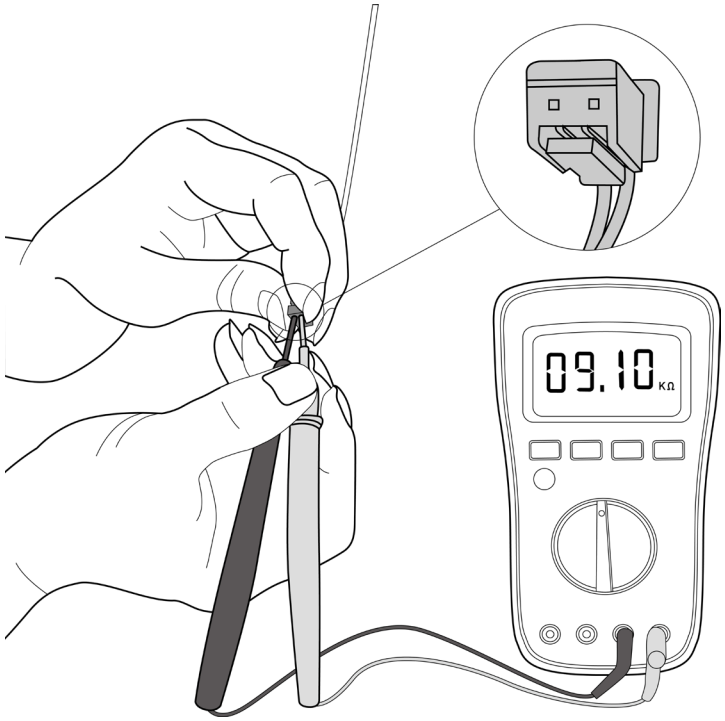


**Note: The picture and the value are only for reference, actual condition and specific value may vary.**

## .2 Compressor Check

1. Disconnect the compressor power cord from outdoor PCB (Refer to Chapter 6. Outdoor Unit Disassembly)).
2. Measure the resistance value of each winding using a multi-meter.
3. Check the resistance value of each winding in the following table.

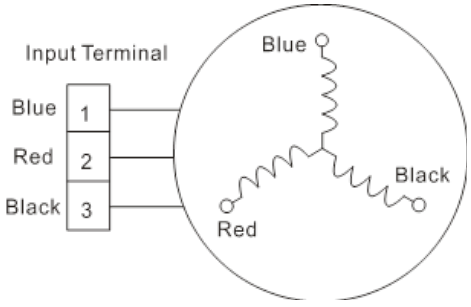

| Resistance Value | KSK89D53UEZ | KSK89D29UEZD | KSN98D22UFZ | KSK103D33UEZ3<br>KSK103D33UEZ3(MD)<br>KBK103D33UEZ3 | KTN150D30UFZA |
|---|---|---|---|---|---|
| Blue-Red | 2.35Ω | 1.99Ω | 1.57Ω | 2.13Ω | 1.02Ω |
| Blue-Black | | | | | |
| Red-Black | | | | | |

| Resistance Value | KSM135D23UFZ | KSN140D21UFZ | KTM140D78UFZ3 | KTF235D22UMT | KTM240D46UKT2 | KTM240D57UMT |
|---|---|---|---|---|---|---|
| Blue-Red | 1.72Ω | 1.28Ω | 1.5Ω | 0.75Ω | 1.04Ω | 0.62Ω |
| Blue-Black | | | | | | |
| Red-Black | | | | | | |

| Resistance Value | KSN140D58UFZ | KTM240D43UKT | KSN98D64UFZ3 | ASN140D35TFZ | ATF235D22TMT | DTN210D32UFZ |
|---|---|---|---|---|---|---|
| Blue-Red | 1.86Ω | 1.03Ω | 2.7Ω | 0.83Ω | 0.75Ω | 1.7Ω |
| Blue-Black | | | | | | |
| Red-Black | | | | | | |

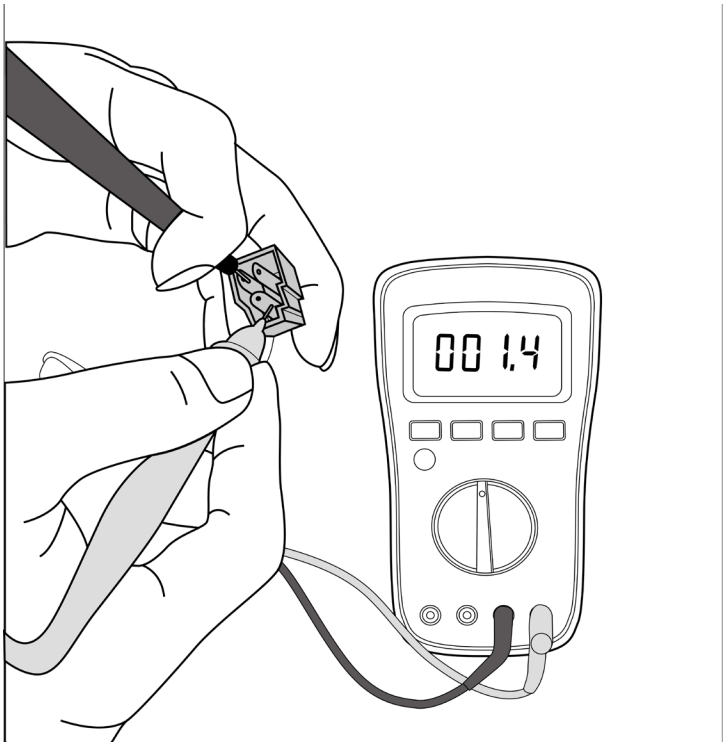


**Note: The picture and the value are only for reference, actual condition and specific value may vary.**

## 8.3 IPM Continuity Check

**WARNING**

**Electricity remains in capacitors even when the power supply is off.**
**Ensure the capacitors are fully discharged before troubleshooting.**

1. Turn off outdoor unit and disconnect power supply.
2. Discharge electrolytic capacitors and ensure all energy-storage unit has been discharged.
3. Disassemble outdoor PCB or disassemble IPM board.
4. Measure the resistance value between P and U(V, W, N); U(V, W) and N.

| Digital tester | | Resistance value | Digital tester | | Resistance value |
|---|---|---|---|---|---|
| (+)Red | (-)Black | | (+)Red | (-)Black | |
| P | N | ∞<br>(Several MΩ) | U | N | ∞<br>(Several MΩ) |
| | U | | V | | |
| | V | | W | | |
| | W | | - | | |

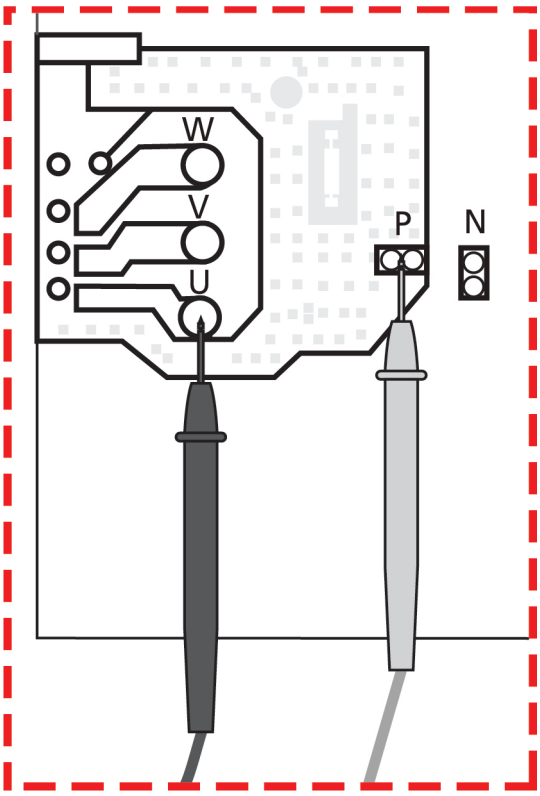


**Note: The picture and the value are only for reference, actual condition and specific value may vary.**

# Appendix

## Contents


i) Temperature Sensor Resistance Value Table for T1, T2, T3, and T4 (°C – K) .....2

ii) Temperature Sensor Resistance Value Table for TP (for some units)(°C --K) .....3

iii) Pressure On Service Port .....4

## i) Temperature Sensor Resistance Value Table for T1,T2,T3 and T4 (°C – K)

| °C | °F | K Ohm | °C | °F | K Ohm | °C | °F | K Ohm | °C | °F | K Ohm |
|---|---|---|---|---|---|---|---|---|---|---|---|
| -20 | -4 | 115.266 | 20 | 68 | 12.6431 | 60 | 140 | 2.35774 | 100 | 212 | 0.62973 |
| -19 | -2 | 108.146 | 21 | 70 | 12.0561 | 61 | 142 | 2.27249 | 101 | 214 | 0.61148 |
| -18 | 0 | 101.517 | 22 | 72 | 11.5 | 62 | 144 | 2.19073 | 102 | 216 | 0.59386 |
| -17 | 1 | 96.3423 | 23 | 73 | 10.9731 | 63 | 145 | 2.11241 | 103 | 217 | 0.57683 |
| -16 | 3 | 89.5865 | 24 | 75 | 10.4736 | 64 | 147 | 2.03732 | 104 | 219 | 0.56038 |
| -15 | 5 | 84.219 | 25 | 77 | 10 | 65 | 149 | 1.96532 | 105 | 221 | 0.54448 |
| -14 | 7 | 79.311 | 26 | 79 | 9.55074 | 66 | 151 | 1.89627 | 106 | 223 | 0.52912 |
| -13 | 9 | 74.536 | 27 | 81 | 9.12445 | 67 | 153 | 1.83003 | 107 | 225 | 0.51426 |
| -12 | 10 | 70.1698 | 28 | 82 | 8.71983 | 68 | 154 | 1.76647 | 108 | 226 | 0.49989 |
| -11 | 12 | 66.0898 | 29 | 84 | 8.33566 | 69 | 156 | 1.70547 | 109 | 228 | 0.486 |
| -10 | 14 | 62.2756 | 30 | 86 | 7.97078 | 70 | 158 | 1.64691 | 110 | 230 | 0.47256 |
| -9 | 16 | 58.7079 | 31 | 88 | 7.62411 | 71 | 160 | 1.59068 | 111 | 232 | 0.45957 |
| -8 | 18 | 56.3694 | 32 | 90 | 7.29464 | 72 | 162 | 1.53668 | 112 | 234 | 0.44699 |
| -7 | 19 | 52.2438 | 33 | 91 | 6.98142 | 73 | 163 | 1.48481 | 113 | 235 | 0.43482 |
| -6 | 21 | 49.3161 | 34 | 93 | 6.68355 | 74 | 165 | 1.43498 | 114 | 237 | 0.42304 |
| -5 | 23 | 46.5725 | 35 | 95 | 6.40021 | 75 | 167 | 1.38703 | 115 | 239 | 0.41164 |
| -4 | 25 | 44 | 36 | 97 | 6.13059 | 76 | 169 | 1.34105 | 116 | 241 | 0.4006 |
| -3 | 27 | 41.5878 | 37 | 99 | 5.87359 | 77 | 171 | 1.29078 | 117 | 243 | 0.38991 |
| -2 | 28 | 39.8239 | 38 | 100 | 5.62961 | 78 | 172 | 1.25423 | 118 | 244 | 0.37956 |
| -1 | 30 | 37.1988 | 39 | 102 | 5.39689 | 79 | 174 | 1.2133 | 119 | 246 | 0.36954 |
| 0 | 32 | 35.2024 | 40 | 104 | 5.17519 | 80 | 176 | 1.17393 | 120 | 248 | 0.35982 |
| 1 | 34 | 33.3269 | 41 | 106 | 4.96392 | 81 | 178 | 1.13604 | 121 | 250 | 0.35042 |
| 2 | 36 | 31.5635 | 42 | 108 | 4.76253 | 82 | 180 | 1.09958 | 122 | 252 | 0.3413 |
| 3 | 37 | 29.9058 | 43 | 109 | 4.5705 | 83 | 181 | 1.06448 | 123 | 253 | 0.33246 |
| 4 | 39 | 28.3459 | 44 | 111 | 4.38736 | 84 | 183 | 1.03069 | 124 | 255 | 0.3239 |
| 5 | 41 | 26.8778 | 45 | 113 | 4.21263 | 85 | 185 | 0.99815 | 125 | 257 | 0.31559 |
| 6 | 43 | 25.4954 | 46 | 115 | 4.04589 | 86 | 187 | 0.96681 | 126 | 259 | 0.30754 |
| 7 | 45 | 24.1932 | 47 | 117 | 3.88673 | 87 | 189 | 0.93662 | 127 | 261 | 0.29974 |
| 8 | 46 | 22.5662 | 48 | 118 | 3.73476 | 88 | 190 | 0.90753 | 128 | 262 | 0.29216 |
| 9 | 48 | 21.8094 | 49 | 120 | 3.58962 | 89 | 192 | 0.8795 | 129 | 264 | 0.28482 |
| 10 | 50 | 20.7184 | 50 | 122 | 3.45097 | 90 | 194 | 0.85248 | 130 | 266 | 0.2777 |
| 11 | 52 | 19.6891 | 51 | 124 | 3.31847 | 91 | 196 | 0.82643 | 131 | 268 | 0.27078 |
| 12 | 54 | 18.7177 | 52 | 126 | 3.19183 | 92 | 198 | 0.80132 | 132 | 270 | 0.26408 |
| 13 | 55 | 17.8005 | 53 | 127 | 3.07075 | 93 | 199 | 0.77709 | 133 | 271 | 0.25757 |
| 14 | 57 | 16.9341 | 54 | 129 | 2.95896 | 94 | 201 | 0.75373 | 134 | 273 | 0.25125 |
| 15 | 59 | 16.1156 | 55 | 131 | 2.84421 | 95 | 203 | 0.73119 | 135 | 275 | 0.24512 |
| 16 | 61 | 15.3418 | 56 | 133 | 2.73823 | 96 | 205 | 0.70944 | 136 | 277 | 0.23916 |
| 17 | 63 | 14.6181 | 57 | 135 | 2.63682 | 97 | 207 | 0.68844 | 137 | 279 | 0.23338 |
| 18 | 64 | 13.918 | 58 | 136 | 2.53973 | 98 | 208 | 0.66818 | 138 | 280 | 0.22776 |
| 19 | 66 | 13.2631 | 59 | 138 | 2.44677 | 99 | 210 | 0.64862 | 139 | 282 | 0.22231 |

## ii) Temperature Sensor Resistance Value Table for TP(for some units) (°C --K)

| °C | °F | K Ohm | °C | °F | K Ohm | °C | °F | K Ohm | °C | °F | K Ohm |
|---|---|---|---|---|---|---|---|---|---|---|---|
| °C | °F | K Ohm | °C | °F | K Ohm | °C | °F | K Ohm | °C | °F | K Ohm |
| -20 | -4 | 542.7 | 20 | 68 | 68.66 | 60 | 140 | 13.59 | 100 | 212 | 3.702 |
| -19 | -2 | 511.9 | 21 | 70 | 65.62 | 61 | 142 | 13.11 | 101 | 214 | 3.595 |
| -18 | 0 | 483 | 22 | 72 | 62.73 | 62 | 144 | 12.65 | 102 | 216 | 3.492 |
| -17 | 1 | 455.9 | 23 | 73 | 59.98 | 63 | 145 | 12.21 | 103 | 217 | 3.392 |
| -16 | 3 | 430.5 | 24 | 75 | 57.37 | 64 | 147 | 11.79 | 104 | 219 | 3.296 |
| -15 | 5 | 406.7 | 25 | 77 | 54.89 | 65 | 149 | 11.38 | 105 | 221 | 3.203 |
| -14 | 7 | 384.3 | 26 | 79 | 52.53 | 66 | 151 | 10.99 | 106 | 223 | 3.113 |
| -13 | 9 | 363.3 | 27 | 81 | 50.28 | 67 | 153 | 10.61 | 107 | 225 | 3.025 |
| -12 | 10 | 343.6 | 28 | 82 | 48.14 | 68 | 154 | 10.25 | 108 | 226 | 2.941 |
| -11 | 12 | 325.1 | 29 | 84 | 46.11 | 69 | 156 | 9.902 | 109 | 228 | 2.86 |
| -10 | 14 | 307.7 | 30 | 86 | 44.17 | 70 | 158 | 9.569 | 110 | 230 | 2.781 |
| -9 | 16 | 291.3 | 31 | 88 | 42.33 | 71 | 160 | 9.248 | 111 | 232 | 2.704 |
| -8 | 18 | 275.9 | 32 | 90 | 40.57 | 72 | 162 | 8.94 | 112 | 234 | 2.63 |
| -7 | 19 | 261.4 | 33 | 91 | 38.89 | 73 | 163 | 8.643 | 113 | 235 | 2.559 |
| -6 | 21 | 247.8 | 34 | 93 | 37.3 | 74 | 165 | 8.358 | 114 | 237 | 2.489 |
| -5 | 23 | 234.9 | 35 | 95 | 35.78 | 75 | 167 | 8.084 | 115 | 239 | 2.422 |
| -4 | 25 | 222.8 | 36 | 97 | 34.32 | 76 | 169 | 7.82 | 116 | 241 | 2.357 |
| -3 | 27 | 211.4 | 37 | 99 | 32.94 | 77 | 171 | 7.566 | 117 | 243 | 2.294 |
| -2 | 28 | 200.7 | 38 | 100 | 31.62 | 78 | 172 | 7.321 | 118 | 244 | 2.233 |
| -1 | 30 | 190.5 | 39 | 102 | 30.36 | 79 | 174 | 7.086 | 119 | 246 | 2.174 |
| 0 | 32 | 180.9 | 40 | 104 | 29.15 | 80 | 176 | 6.859 | 120 | 248 | 2.117 |
| 1 | 34 | 171.9 | 41 | 106 | 28 | 81 | 178 | 6.641 | 121 | 250 | 2.061 |
| 2 | 36 | 163.3 | 42 | 108 | 26.9 | 82 | 180 | 6.43 | 122 | 252 | 2.007 |
| 3 | 37 | 155.2 | 43 | 109 | 25.86 | 83 | 181 | 6.228 | 123 | 253 | 1.955 |
| 4 | 39 | 147.6 | 44 | 111 | 24.85 | 84 | 183 | 6.033 | 124 | 255 | 1.905 |
| 5 | 41 | 140.4 | 45 | 113 | 23.89 | 85 | 185 | 5.844 | 125 | 257 | 1.856 |
| 6 | 43 | 133.5 | 46 | 115 | 22.89 | 86 | 187 | 5.663 | 126 | 259 | 1.808 |
| 7 | 45 | 127.1 | 47 | 117 | 22.1 | 87 | 189 | 5.488 | 127 | 261 | 1.762 |
| 8 | 46 | 121 | 48 | 118 | 21.26 | 88 | 190 | 5.32 | 128 | 262 | 1.717 |
| 9 | 48 | 115.2 | 49 | 120 | 20.46 | 89 | 192 | 5.157 | 129 | 264 | 1.674 |
| 10 | 50 | 109.8 | 50 | 122 | 19.69 | 90 | 194 | 5 | 130 | 266 | 1.632 |
| 11 | 52 | 104.6 | 51 | 124 | 18.96 | 91 | 196 | 4.849 | | | |
| 12 | 54 | 99.69 | 52 | 126 | 18.26 | 92 | 198 | 4.703 | | | |
| 13 | 55 | 95.05 | 53 | 127 | 17.58 | 93 | 199 | 4.562 | | | |
| 14 | 57 | 90.66 | 54 | 129 | 16.94 | 94 | 201 | 4.426 | | | |
| 15 | 59 | 86.49 | 55 | 131 | 16.32 | 95 | 203 | 4.294 | | | |
| 16 | 61 | 82.54 | 56 | 133 | 15.73 | 96 | 205 | 4.167 | | | |
| 17 | 63 | 78.79 | 57 | 135 | 15.16 | 97 | 207 | 4.045 | | | |
| 18 | 64 | 75.24 | 58 | 136 | 14.62 | 98 | 208 | 3.927 | | | |
| 19 | 66 | 71.86 | 59 | 138 | 14.09 | 99 | 210 | 3.812 | | | |

## iii) Pressure On Service Port

### Cooling chart(R290):

| °F(°C) | ODU(DB) / IDU(DB/WB) | 0(-17) | 5(-15) | 15 (-9.44) | 45 (7.22) | 75 (23.89) | 85 (29.44) | 95 (35) | 105 (40.56) | 115 (46.11) | 120 (48.89) |
|---|---|---|---|---|---|---|---|---|---|---|---|
| BAR | 70/59 (21.11/15) | 3.6 | 3.7 | 4.2 | 4.6 | 4.7 | 4.4 | 4.6 | 4.9 | 5.8 | 6.0 |
| | 75/63 (23.89/17.22) | 3.8 | 3.9 | 4.5 | 4.9 | 4.9 | 4.7 | 5.0 | 5.2 | 6.1 | 6.4 |
| | 80/67 (26.67/19.44) | 4.0 | 4.1 | 4.8 | 5.4 | 5.3 | 5.1 | 5.2 | 5.5 | 6.4 | 6.8 |
| | 90/73 (32.22/22.78) | 4.4 | 4.4 | 5.5 | 6.0 | 5.9 | 5.4 | 5.7 | 6.0 | 7.1 | 7.4 |
| PSI | 70/59 (21.11/15) | 53 | 54 | 60 | 66 | 68 | 64 | 67 | 71 | 84 | 88 |
| | 75/63 (23.89/17.22) | 55 | 56 | 66 | 71 | 71 | 68 | 72 | 75 | 88 | 92 |
| | 80/67 (26.67/19.44) | 59 | 59 | 70 | 79 | 77 | 74 | 75 | 80 | 92 | 99 |
| | 90/73 (32.22/22.78) | 64 | 64 | 79 | 87 | 85 | 79 | 83 | 88 | 103 | 108 |
| MPa | 70/59 (21.11/15) | 0.36 | 0.37 | 0.42 | 0.46 | 0.47 | 0.44 | 0.46 | 0.49 | 0.58 | 0.60 |
| | 75/63 (23.89/17.22) | 0.38 | 0.39 | 0.45 | 0.49 | 0.49 | 0.47 | 0.50 | 0.52 | 0.61 | 0.64 |
| | 80/67 (26.67/19.44) | 0.40 | 0.41 | 0.48 | 0.54 | 0.53 | 0.51 | 0.52 | 0.55 | 0.64 | 0.68 |
| | 90/73 (32.22/22.78) | 0.44 | 0.44 | 0.55 | 0.60 | 0.59 | 0.54 | 0.57 | 0.60 | 0.71 | 0.74 |

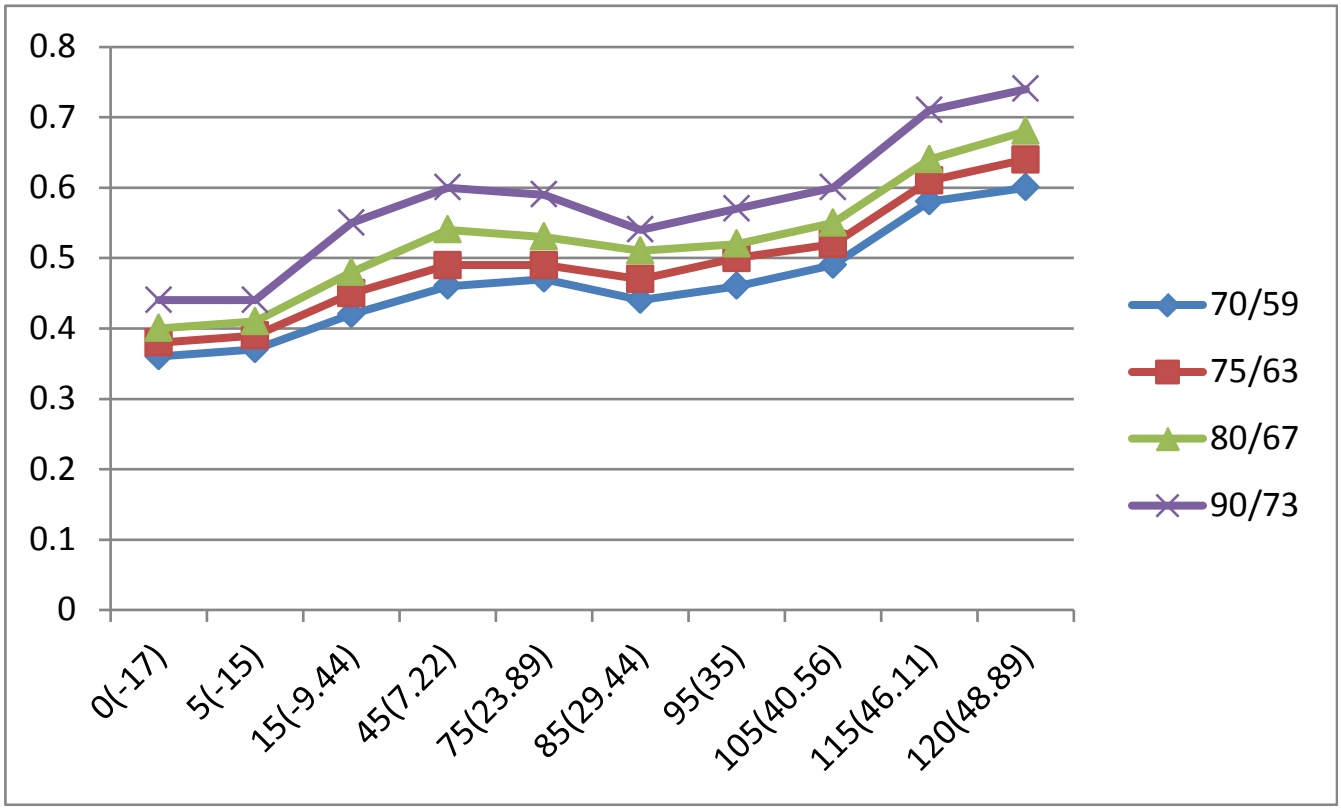

## Heating chart(R290):

| °F(°C) | QDU(DB/WB) / IDU(DB) | 57/53 (13.89/11.67) | 47/43 (8.33/6.11) | 37/33 (2.78/0.56) | 27/23 (-2.78/-5) | 17/13 (-8.33/-10.56) | 0/-2 (-17/-19) | -17/-18 (-27/-28) |
|---|---|---|---|---|---|---|---|---|
| BAR | 55(12.78) | 16.2 | 14.4 | 13.0 | 11.9 | 10.5 | 9.4 | 0.9 |
| | 65(18.33) | 17.1 | 15.2 | 14.5 | 13.3 | 11.7 | 10.8 | 1.1 |
| | 75(23.89) | 17.9 | 15.8 | 15.0 | 14.2 | 12.3 | 11.4 | 1.1 |
| PSI | 55(12.78) | 250 | 235 | 209 | 188 | 172 | 153 | 136 |
| | 65(18.33) | 268 | 248 | 220 | 210 | 193 | 169 | 157 |
| | 75(23.89) | 279 | 260 | 230 | 217 | 206 | 178 | 165 |
| MPa | 55(12.78) | 1.73 | 1.62 | 1.44 | 1.30 | 1.19 | 1.05 | 0.94 |
| | 65(18.33) | 1.85 | 1.71 | 1.52 | 1.45 | 1.33 | 1.17 | 1.08 |
| | 75(23.89) | 1.93 | 1.79 | 1.58 | 1.50 | 1.42 | 1.23 | 1.14 |

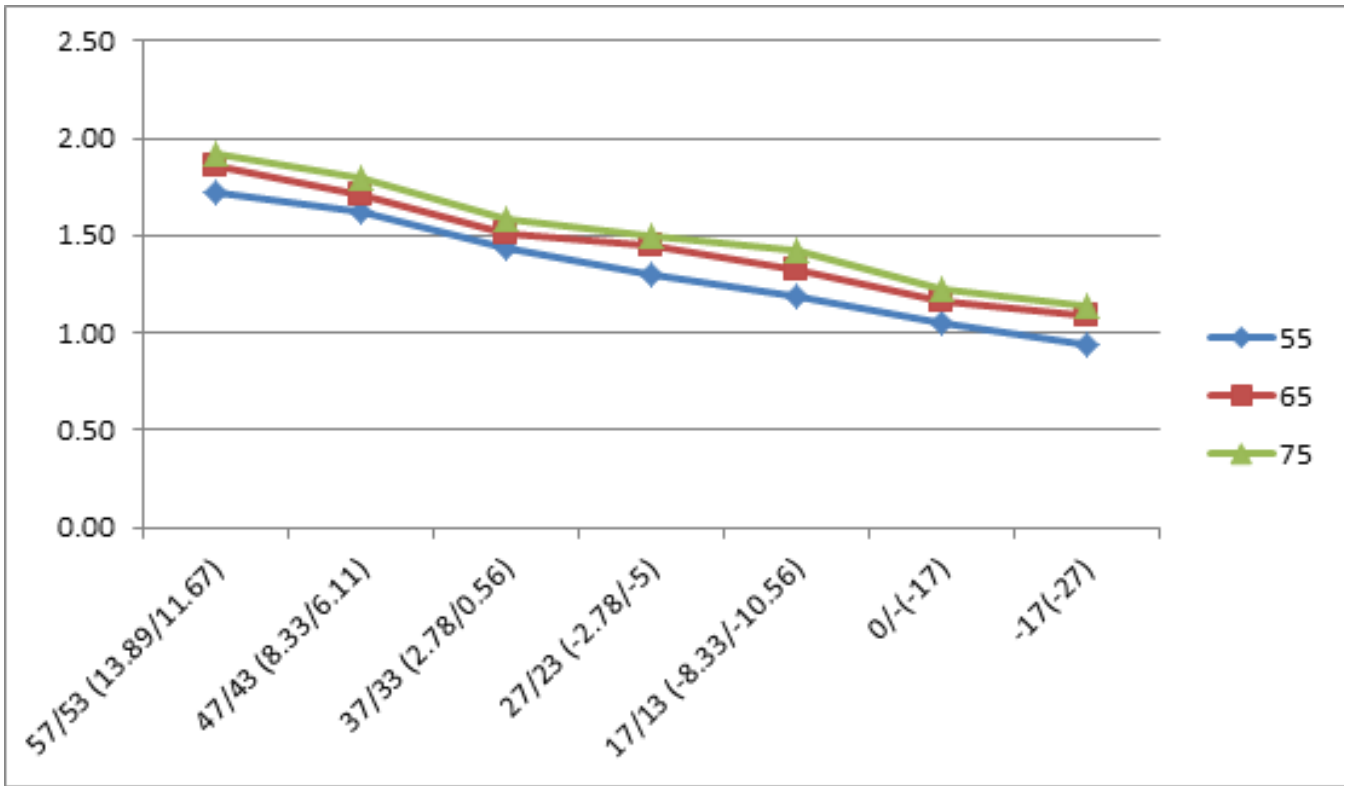

## System Pressure Table-R290

| Pressure | | | Temperature | | Pressure | | | Temperature | |
|---|---|---|---|---|---|---|---|---|---|
| Kpa | bar | PSI | °C | °F | Kpa | bar | PSI | °C | °F |
| 100 | 1 | 14.5 | -42.412 | -44.342 | 1350 | 13.5 | 195.75 | 39.383 | 102.889 |
| 150 | 1.5 | 21.75 | -32.818 | -27.072 | 1400 | 14 | 203 | 40.959 | 105.726 |
| 200 | 2 | 29 | -25.451 | -13.812 | 1450 | 14.5 | 210.25 | 42.495 | 108.491 |
| 250 | 2.5 | 36.25 | -19.382 | -2.888 | 1500 | 15 | 217.5 | 43.993 | 111.187 |
| 300 | 3 | 43.5 | -14.176 | 6.483 | 1550 | 15.5 | 224.75 | 45.455 | 113.819 |
| 350 | 3.5 | 50.75 | -9.589 | 14.740 | 1600 | 16 | 232 | 46.882 | 116.388 |
| 400 | 4 | 58 | -5.471 | 22.153 | 1650 | 16.5 | 239.25 | 48.277 | 118.899 |
| 450 | 4.5 | 65.25 | -1.722 | 28.901 | 1700 | 17 | 246.5 | 49.642 | 121.356 |
| 500 | 5 | 72.5 | 1.729 | 35.112 | 1750 | 17.5 | 253.75 | 50.977 | 123.759 |
| 550 | 5.5 | 79.75 | 4.931 | 40.876 | 1800 | 18 | 261 | 52.285 | 126.113 |
| 600 | 6 | 87 | 7.924 | 46.263 | 1850 | 18.5 | 268.25 | 53.566 | 128.419 |
| 650 | 6.5 | 94.25 | 10.738 | 51.328 | 1900 | 19 | 275.5 | 54.822 | 130.680 |
| 700 | 7 | 101.5 | 13.396 | 56.113 | 1950 | 19.5 | 282.75 | 56.054 | 132.897 |
| 750 | 7.5 | 108.75 | 15.918 | 60.652 | 2000 | 20 | 290 | 57.262 | 135.072 |
| 800 | 8 | 116 | 18.318 | 64.972 | 2050 | 20.5 | 297.25 | 58.449 | 137.208 |
| 850 | 8.5 | 123.25 | 20.611 | 69.100 | 2100 | 21 | 304.5 | 59.614 | 139.305 |
| 900 | 9 | 130.5 | 22.806 | 73.051 | 2150 | 21.5 | 311.75 | 60.759 | 141.366 |
| 950 | 9.5 | 137.75 | 24.914 | 76.845 | 2200 | 22 | 319 | 61.884 | 143.391 |
| 1000 | 10 | 145 | 26.942 | 80.496 | 2250 | 22.5 | 326.25 | 62.991 | 145.384 |
| 1050 | 10.5 | 152.25 | 28.897 | 84.015 | 2300 | 23 | 333.5 | 64.079 | 147.342 |
| 1100 | 11 | 159.5 | 30.785 | 87.413 | 2350 | 23.5 | 340.75 | 65.15 | 149.27 |
| 1150 | 11.5 | 166.75 | 32.611 | 90.700 | 2400 | 24 | 348 | 66.204 | 151.167 |
| 1200 | 12 | 174 | 34.38 | 93.884 | 2450 | 24.5 | 355.25 | 67.241 | 153.034 |
| 1250 | 12.5 | 181.25 | 36.096 | 96.973 | 2500 | 25 | 362.5 | 68.263 | 154.873 |
| 1300 | 13 | 188.5 | 37.763 | 99.973 | | | | | |